CITY OF SAN FERNANDO

WATER FACILITIES FOR ASSESSMENT DISTRICT NO. D-272

VOLUME 2 - DRAWINGS

JAMES M. MONTGOMERY CONSULTING ENGINEERS, INC.
PASADENA, CALIFORNIA

R. JAMES

REGISTERED PROFESSIONAL ENGINEER
DAVID J. RINGEL
No. C24015
Exp. 12/31/87
CIVIL
STATE OF CALIFORNIA

JOB No. 18.0161 FILE No. ZFB3:(121,315)SFG1.DGN

LIST OF DRAWINGS

GENERAL

G-1 TITLE SHEET
G-2 LOCATION MAP, VICINITY MAP, NOTES AND LEGENDS AND LIST OF DRAWINGS

CIVIL

C-1 PLAN AND SECTIONS
C-2 PLAN AND DETAIL
C-3 SECTIONS
C-4 PLAN AND SECTIONS
C-5 SECTION AND DETAILS
C-6 PLAN AND PROFILE, FOOTHILL BLVD. TO HUBBARD AVE. STA. 0 + 45.33 TO STA. 7 + 50
C-7 PLAN AND PROFILE HUBBARD AVE. TO 8Tth ST. STA. 7 + 50 TO STA. 18 + 50
C-8 PLAN AND PROFILE, 8th ST. STA. 18 + 50 TO STA. 28 + 50
C-9 PLAN AND PROFILE, 8th ST. STA. 28 + 50 TO STA. 40 + 00
C-10 PLAN AND PROFILE, 8th ST. STA. 40 + 00 TO STA. 51 + 50
C-11 PLAN AND PROFILE, 8th ST. STA. 51 + 50 TO STA. 63 + 00
C-12 PLAN AND PROFILE, 8th ST. TO PACOIMA STA. 63 + 00 TO STA. 73 + 98.25
C-13 PLAN AND PROFILE, 8th ST. TO ARROYO STA. 1 + 00 TO STA. 11 + 00
C-14 PLAN AND PROFILE, ARROYO AVE. STA. 11 + 00 TO STA. 22 + 50
C-15 PLAN AND PROFILE, ARROYO AVE. STA. 22 + 50 TO STA. 29 + 40 ±
C-16 PLAN AND PROFILE, ARROYO AVE. STA. 1 + 00 TO STA. 5 + 00
C-17 PLAN AND PROFILE, PACOIMA WASH STA. 5 + 00 TO STA. 15 + 00
C-18 PLAN AND PROFILE, PACOIMA WASH STA. 15 + 00 TO STA. 23 + 83 ±
C-19 MISCELLANEOUS DETAILS
C-20 MISCELLANEOUS DETAILS
C-21 MISCELLANEOUS DETAILS
C-22 MISCELLANEOUS DETAILS
C-23 STREET IMPROVEMENT FOR ARROYO AVENUE GLENOAKS BLVD TO STATION 7+50
C-24 STREET IMPROVEMENT FOR ARROYO AVENUE STATION 7+50 TO STATION 19+50
C-25 STREET IMPROVEMENT FOR ARROYO AVENUE STATION 19+50 TO EIGHTH STREET

STRUCTURAL

S-1 GENERAL NOTES AND STANDARD DETAILS
S-2 STANDARD DETAILS
S-3 STANDARD DETAILS
S-4 UNDERDRAIN PLAN
S-5 FLOOR AND FOUNDATION PLAN
S-6 ROOF PLAN
S-7 WALL SECTION AND DETAILS
S-8 ROOF REINFORCEMENT
S-9 OUTLET SUMP STRUCTURE
S-10 SECTIONS AND DETAILS
S-11 RESERVOIR ACCESS

MECHANICAL

M-1 BOOSTER PUMP STATION SITE PLAN, PLAN AND SECTIONS
M-2 MECHANICAL STANDARD DETAILS

ELECTRICAL

E-1 RESERVOIR PLOT PLAN, SYMBOLS AND GENERAL NOTES
E-2 RESERVOIR SINGLE LINE DIAGRAM AND DETAILS
E-3 RESERVOIR ELECTRICAL PLANS AND DETAILS
E-4 BOOSTER PUMP STATION PLOT, PLAN SYMBOLS AND NOTES
E-5 BOOSTER PUMP STATION SINGLE LINE DIAGRAM, MCC AND DETAILS
E-6 BOOSTER PUMP STATION SCHEMATIC DIAGRAMS, MISC. DETAILS
E-7 BOOSTER PUMP STATION ELECTRICAL PLAN

INSTRUMENTATION

I-1 INSTRUMENTATION SYMBOLS AND ABBREVIATIONS
I-2 TELEMETRY AND INSTRUMENTATION SYSTEMS
I-3 PANEL MODIFICATIONS AND DETAILS

IRRIGATION

L-1 IRRIGATION PLAN
L-2 PLANTING PLAN

LOCATION MAP

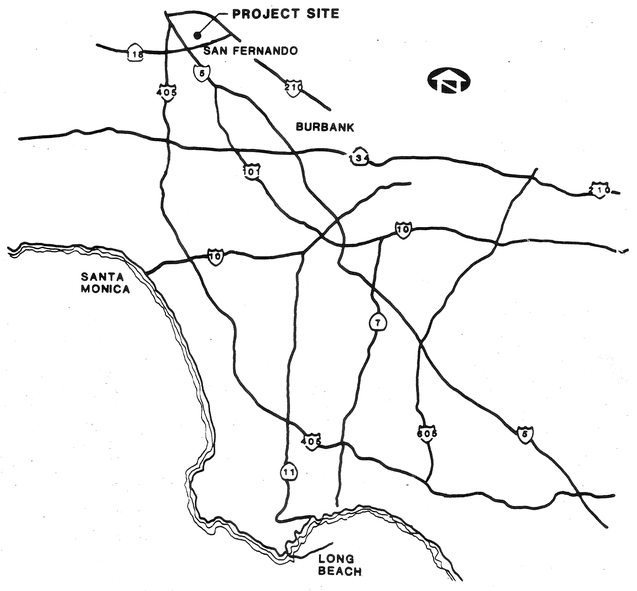

VICINITY MAP/INDEX OF DRAWINGS

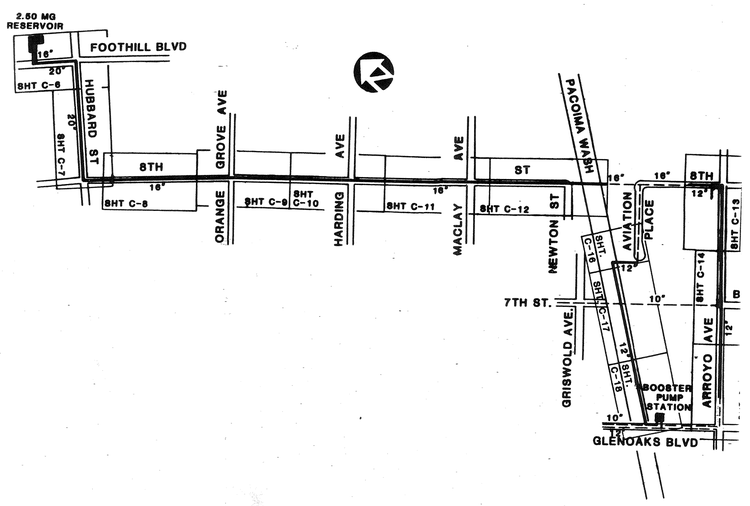

NOTES AND LEGENDS

GENERAL NOTES

1. CONTRACTOR SHALL VERIFY LOCATION AND DEPTHS OF EXISTING WATER LINES AND AND VALVES PRIOR TO NEW INSTALLATION
2. ALL BURIED VALVES SHALL BE PROVIDED WITH RISER, VALVE BOXES AND COVERS.
3. ALL WATER MAIN CROSSINGS OF SEWER LINES SHALL CONFORM TO REQUIREMENTS OF STATE OF CALIFORNIA, DEPT. OF HEALTH SERVICES.
4. ALL PERMANENT RESURFACING, CURBS, GUTTERS AND OTHER EXISTING IMPROVEMENTS DAMAGED DURING CONSTRUCTION SHALL BE REPLACED 'IN KIND' AND SHALL BE RECONSTRUCTED AT THE SAME ELEVATION AND LOCATION
5. EXISTING UTILITIES SHALL BE MAINTAINED IN PLACE BY THE CONTRACTOR UNLESS OTHERWISE NOTED ON THE DRAWINGS.
6. THE CONTRACTOR SHALL BE RESPONSIBLE FOR PROVIDING LABOR AND EQUIPMENT NECESSARY TO ASSIST THE OWNER IN PERFORMING THE COMPACTION TESTING.

REGISTERED PROFESSIONAL ENGINEER — DAVID J. RAMEL — C24015 — Exp. 12/31/89 — CIVIL — STATE OF CALIFORNIA

LEGENDS

- CENTERLINE
- GATE VALVE
- BUTTERFLY VALVE
- S — EXISTING SEWER MAIN
- W — EXISTING WATER MAIN
- E — EXISTING ELECTRICAL CONDUIT
- G — EXISTING GAS LINE
- FH. EXISTING FIRE HYDRANT
- EXISTING WATER VALVE
- EXISTING SEWER MANHOLE
- PROPOSED WATER PIPELINE

LIST OF ABBREVIATIONS

EXIST.	-EXISTING	GV.	-GATE VALVE
STA.	-STATION	BFV.	-BUTTEFLY VALVE
INV.	-INVERT	GALV.	-GALVANIZED
SHT.	-SHEET	STD.	-STANDARD
CONN.	-CONNECTION	RCP.	-REINFORCED CONCRETE PIPE
℄	-CENTERLINE	ACP.	-ASBESTOS CEMENT PIPE
R/W	-RIGHT OF WAY	VCP.	-VITRIFIED CLAY PIPE
B.C.	-BEGIN OF CURVE	TYP.	-TYPICAL
E.C.	-END CURVE	CML&C	-CEMENT MORTAR LINED & COATED
FLG.	-FLANGE		
R.T.	-RING TITE	PL.	-PLATE
CPLG.	-COUPLING	SPEC.	-SPECIFICATIONS
∢ PT.	-ANGLE POINT	O.D.	-OUTSIDE DIAMETER
AWWA	-AMERICAN WATER WORKS ASSOCIATION	MIN.	-MINIMUM
		MAX.	-MAXIMUM
SQ.	-SQUARE	DIAM.	-DIAMETER
WWM	-WELDED WIRE MESH	CONT.	-CONTINUED
EX.	-EXTRA	STL.	-STEEL
		SCCP.	-STEEL CYLINDER CONCRETE PIPE

REV	DATE	BY	DESCRIPTION

SCALE: NONE

DESIGNED: Ima Hogarth
DRAWN: Ima Hogarth
CHECKED: [signature]

SUBMITTED: [signature] PROJECT ENGINEER — C24015 R. C. E. NO. — 5/18/88 DATE
[signature] JAMES M. MONTGOMERY CONSULTING ENGINEERS, INC. — 24656 R. C. E. NO. — 5/18/88 DATE

JAMES M. MONTGOMERY CONSULTING ENGINEERS, INC.
P.O. BOX 7009, 250 N. MADISON AVE., PASADENA, CA. 91109-7009

APPROVED: [signature] City Engineer — RCE 19,642 — 5/18/88 DATE
APPROVED: _____ DATE

CITY OF SAN FERNANDO
WATER FACILITIES FOR ASSESSMENT DISTRICT NO. D-272
LOCATION MAP, VICINITY MAP, NOTES AND LEGENDS AND LIST OF DRAWINGS

SHEET G-2 OF SHEETS

JOB No. 18.0161 FILE No. ZFB3#222.3251SFG2.DGN

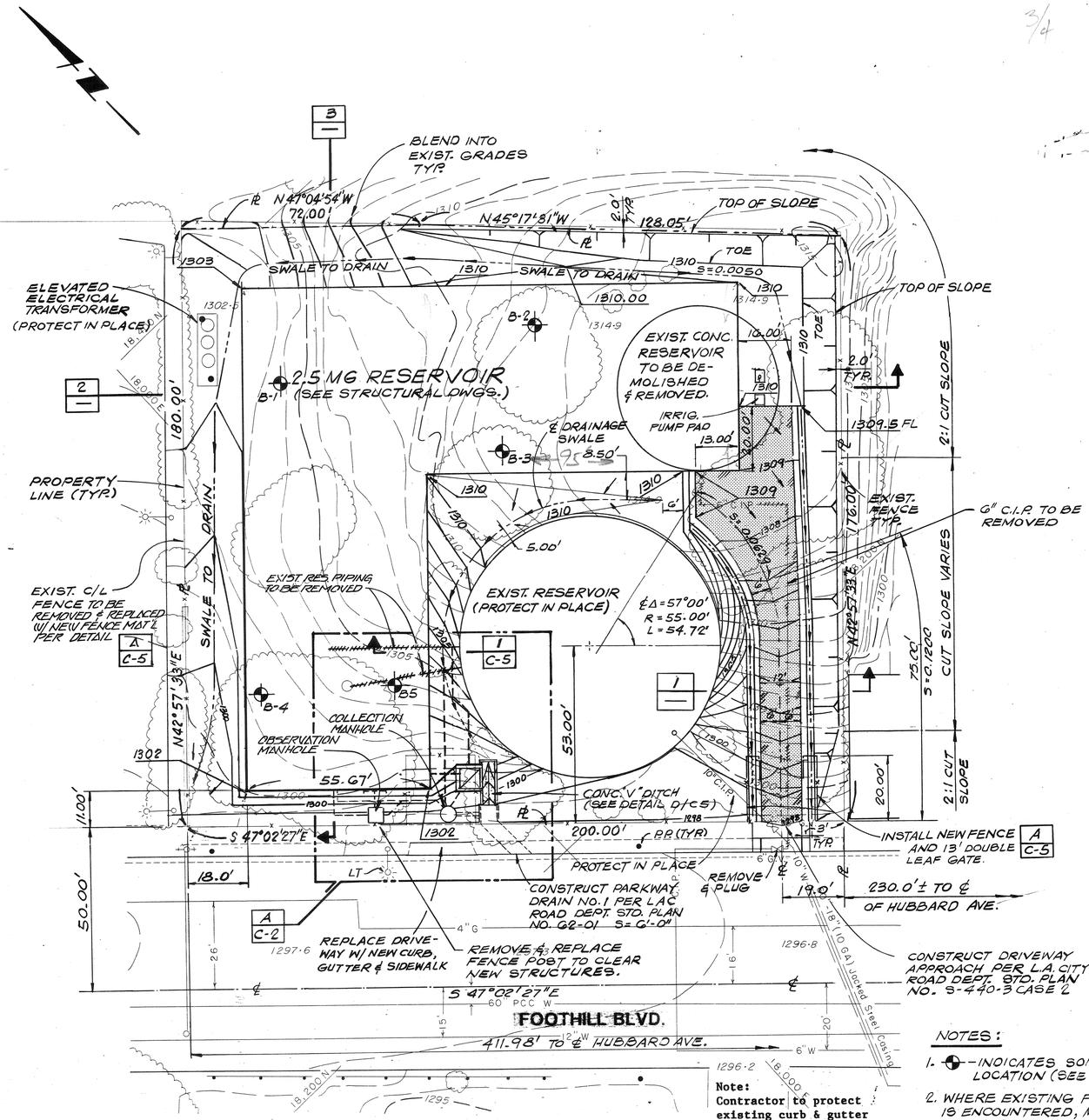

BENCHMARK:
LA #03-00840
STANDARD TRAVERSE MONUMENT SYLI-12C
STAMP 4-L-20 1941
ON CENTER LINE INTER-SECTION FOOTHILL BLVD. AND HUBBARD ST.
ELEVATION 1,294.285 (1980)

GRADING PLAN
SCALE: 1" = 20'

NOTES:
1. ⊕ - INDICATES SOIL BORING LOCATION (SEE NOTE-2)
2. WHERE EXISTING FILL MATERIAL IS ENCOUNTERED, MATERIAL MUST BE OVEREXCAVATED & REMOVED TO COMPETENT NATURAL GROUND AND REPLACED WITH PROPERLY COMPACTED FILL. SEE SOIL REPORT TITLED GEOTECHNICAL INVESTIGATION SAN FERNANDO WATER FACILITIES IMPROVEMENTS, SAN FERNANDO, CALIF. PREPARED BY GEOFON INC., 5552 CERRITOS AVE., SUITE B; CYPRESS CALIFORNIA 90630; DATED JULY 27, 1987.

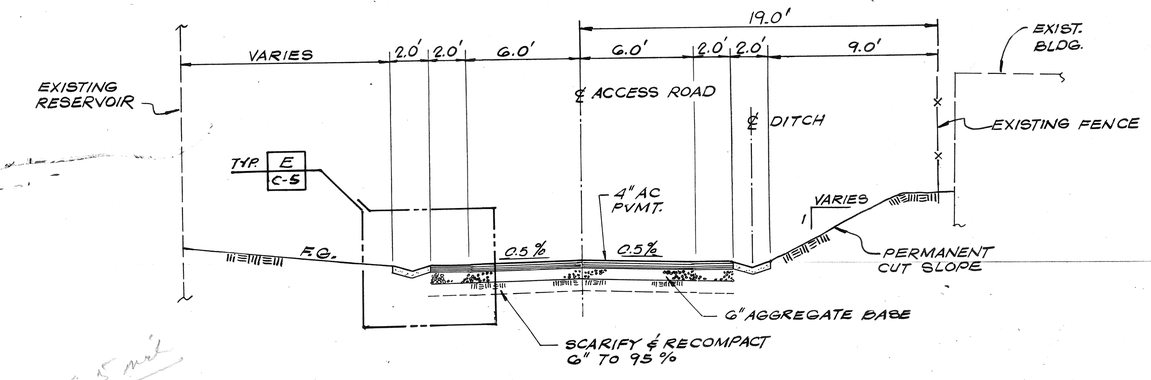

SECTION 1
SCALE 1" = 4'

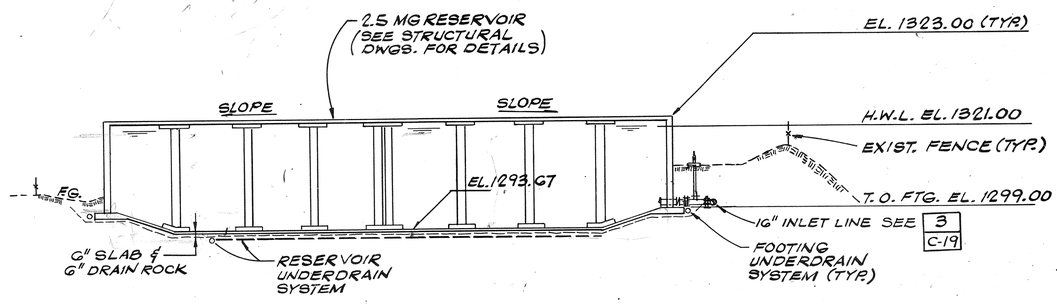

SECTION 2
SCALE 1" = 20'

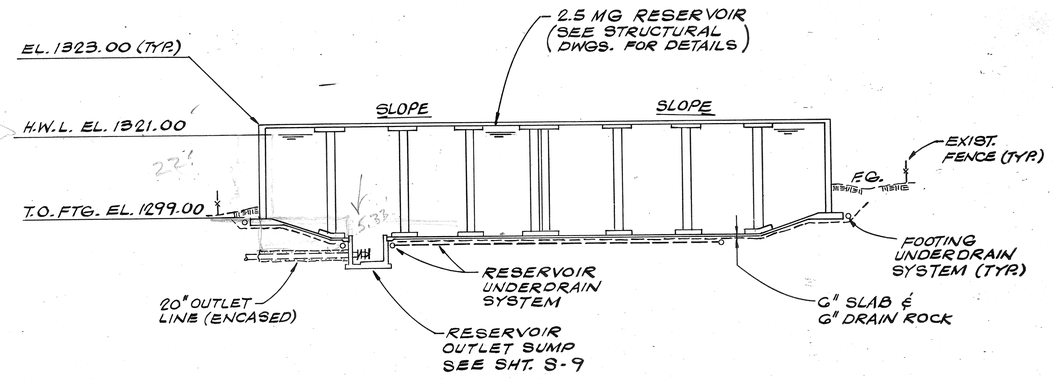

SECTION 3
SCALE 1" = 20'

UNDERGROUND SERVICE ALERT
1-800-422-4133
CALL USA/SC
FOR UNDERGROUND LOCATING
2 WORKING DAYS BEFORE YOU DIG.

REGISTERED PROFESSIONAL ENGINEER DAVID L. [illegible] No. C 24015 Exp. 12/31/89 CIVIL STATE OF CALIFORNIA

REV	DATE	BY	DESCRIPTION

SCALE: AS NOTED

DESIGNED [illegible]
DRAWN V. Vasallo
CHECKED [illegible]

SUBMITTED [illegible] PROJECT ENGINEER — C24015 R.C.E. NO. — 4/28/88 DATE
RECOMMENDED [illegible] JAMES M. MONTGOMERY CONSULTING ENGINEERS, INC. — 24656 R.C.E. NO. — 4/28/88 DATE

JAMES M. MONTGOMERY CONSULTING ENGINEERS, INC.
P.O. BOX 7009, 250 N. MADISON AVE., PASADENA, CA 91109-7009

APPROVED Joseph L. Rojas RCE 18,692 City Engineer — 5/18/88 DATE
APPROVED _____ — DATE

CITY OF SAN FERNANDO
WATER FACILITIES FOR ASSESSMENT DISTRICT NO. D-272
PLAN AND SECTIONS

SHEET C-1 OF 52 SHEETS

WESTERN AERIAL SURVEYS VENTURA RIVERSIDE
DP 1274
FILE
JOB NO.

NEW RESERVOIR FOR DETAILS SEE STRUCTURAL DWGS.

RESERVOIR FOOTING UNDERDRAIN 4" VCP

RESERVOIR UNDERDRAIN 4" VCP INV. 1291.92 (TYP.)

2 TYP. C-3

CONC PIPE BABE ON GRADE

3 C-19

IRR. PUMP BABE ON GRADE

TYP. 1 C-3

EXISTING RESERVOIR (PROTECT IN PLACE)

N 42°57'33"E

RESERVOIR FOOTING UNDERDRAIN 4" VCP

SCH. A RESERVOIR

SCH. B PIPELINE

16" CML & C AND ℄ STA. 0+70.00

20" CML & C STA. 0+45.33

A —

16" CML & C STL. PIPE RES. INLET SEE PROFILE 2 C-19

50.00'

20.00'

S 42°57'33"W

20" CML & C STL. PIPE (RES. OUTLET)

℄ FOOTHILL BLVD.

16" CML & C STA. 0+00

20" CML & C STA. 1+15.33

S 47°02'27"E

NEW 20" PIPELINE SEE SHEET C-6

20" CML & C STA. 2+51.66

PROPERTY LINE

20" OUTLET PIPELINE STA. 0+45.33 INV. 1288.83

FOR CONTINUATION SEE PLAN & PROFILE SHEET C-6

Note:
Contractor to protect existing curb & gutter in place, or repair in kind per city standard at contractor's expense.

RESERVOIR PIPING PLAN

SCALE: 1" = 20'

℄ SUMP & UNDERDRAIN

4'-0" 4'-0" 22'-6"

4" VCP (PERF.) INV. 1291.92

2 TYP. C-3

9" TYP.

TYP. 1 C-3

G C-3 1 C-4

F C-5

S.S. LADDER B S-1

RESERVOIR OUTLET SUMP (SEE SHT. S-9)

1'-3" 2'-3"

20" WAFER CHECK VALVE (SEE SPECS.)

20" PIPE SPOOL (24" LG.)

20" B'FLY VALVE (SEE SPECS.)

INV. 1287.5

6" GATE VALVE

(NOTE: FOR VALVE OPER. STEM SEE SHT. S-9)

4"x6" TEE DN. W/ 6"-90° ELL BELOW

1'-3"

STA. 0+10.50 20" CML & C

4'-9"

2'-9" 2'-0"

6"-45° BEND (ROTATE AS REQ'D.)

6"-22½° BEND (ROTATE AS REQ'D.)

12'-0"

TYP 3 C-3

9"

CUT-OFF WALL D C-4

6" CML & C STL. PIPE D.P. 150 P.S.I. RES. DRAIN

6" UNDERDRAIN COLLECTOR (SCH. 80 PVC)

OUTSIDE FACE OF RESERVOIR

20" OUTLET PIPELINE STA. 0+34.33

RES. WALL TYP

SCH. A RES.

SCH. B PIPELINE

5'-6" TYP

8'-0"

4" VCP (PERF.)

INV. 1287.36 6"-90° ELL

20" SLEEVE CPLG.

INV. 1287.34 6"-90° ELL

3'-0"

INSUL. CPLG.

OBSERVATION MANHOLE FOR DET. SEE A C-4 B C-4

4 C-4

3'-3"

7'-9" 4'-0" 16'-0" 8'-6"

20" CML & C STL. PIPE D.P. 150 P.S.I. RES. OUTLET

27'-9"

16" CML & C STL. PIPE D.P. 150 P.S.I. OVERFLOW

6" PVC SCH. 80

PIPE SUPPORT

3'-6"

16" SLEEVE CPLG.

F C-5

1'-6"

6" CML & C STL. PIPE D.P. 150 P.S.I. DRAIN LINE

INV. 1286.10 6"-45° WYE

INV. 1287.22 6"-22½° BEND

4"x6" TEE DN. W/ 6"-90° ELL BELOW

3'-0"

5'-8"

3'-0"

INV. 1286.05 6"-22½° BEND TYP G C-5

INV. 1286.02

INV. 1286.13 6"-45° BEND

7'-5½"

G TYP. C-5

2 C-4

3 C-4

4" VCP (PERF.)

REMOVE INTERFERING PORTIONS OF EXIST. PIPES.

EXIST. 10" WSP (OVERFLOW)

INV. 1299.8 ± 10"-90° ELL CONNECT TO EXIST. WSP

EXISTING RESERVOIR

EXIST. 6" C.I. DRAIN

SLEEVE CPLG. CONN. TO EXIST. DRAIN

NEW 6" FLG'D x PE 18'LG. PIPE SPOOL

NEW 6" GATE VALVE

INV. 1287.4 ± (80°(4)PC. ELL.)

18.17'

S 42°57'33"W

8'-0"

10"-45° ELL

S 02°02'27"E 10.13'

5'-0"

13'-0"

10"-45° ELL

10" CML & C STL. PIPE D.P. 150 P.S.I. (OVER FLOW)

6" NEW CML & C STL. D.P. 150 P.S.I. DRAIN LINE

INV. 1299.50

11.00'

S 42°57'33"W

INV. 1299.00

6" 4'-0" 6"

EL. 1301.00

12" 3'-0"

F C-5

INSUL. CPLG.

6"

1'-6"

OVERFLOW STRUCTURE 5 C-3

EL. 1298.50

EL. 1298.33

6'-0"

EL. 1302.00

6" WIDE x 9" HIGH CURB

9'-6" S=6" S=6"

CONC. "V" DITCH D C-5

EL. 1298.50

19'-4"

20°

INV. 1287.20

½" PVC SCH 80 DRAIN LINE

INV. 1298.00

8'-6"

CURB & SIDEWALK DRAIN BOX PER L.A.C. STD. PLAN G2-01 S= 6'-0"

5 C-4

3'-0"

DISCHARGE LINE 4" CML & C STL. PIPE

48" I.D. COLLECTOR MANHOLE W/ SUMP PUMP (ABS PUMPS MOD. #AFI5 22 30-4 CD1-3")

G C-4

45°

4'-0"

CURB LINE

NOTE:
FOR 12" ϕ OR SMALLER PIPE CONC. ENCASEMENT, SEE SECT. 4 C-3

DETAIL A

SCALE: ¼" = 1'-0"

REGISTERED PROFESSIONAL ENGINEER — Joseph B. Kyle — No. C24015 Exp. 12/5/89 — CIVIL — STATE OF CALIFORNIA

UNDERGROUND SERVICE ALERT
1-800-422-4133
CALL USA/SC
FOR UNDERGROUND LOCATING
2 WORKING DAYS BEFORE YOU DIG.

REV	DATE	BY	DESCRIPTION

SCALE: AS NOTED

DESIGNED —
DRAWN V. Vasallo
CHECKED —

SUBMITTED — PROJECT ENGINEER — C24015 R.C.E. NO. — 4/28/88 DATE

RECOMMENDED — JAMES M. MONTGOMERY CONSULTING ENGINEERS, INC. — 24656 R.C.E. NO. — 4/27/88 DATE

JAMES M. MONTGOMERY CONSULTING ENGINEERS, INC.
P.O. BOX 7009, 250 N. MADISON AVE., PASADENA, CA 91109-7009

APPROVED — Joseph B. Kyle, R.C.E. 18,682 City Engineer — 5/18/88 DATE

APPROVED — DATE

CITY OF SAN FERNANDO
WATER FACILITIES FOR ASSESSMENT DISTRICT NO. D-272
PLAN AND DETAIL

SHEET C-2 OF 52 SHEETS

JOB NO. FILE CC

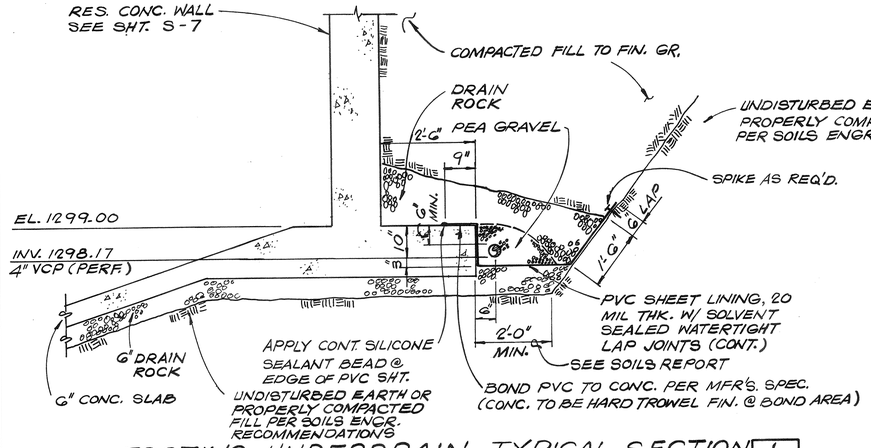

FOOTING UNDERDRAIN TYPICAL SECTION 1 / C-2

SCALE : ½" = 1'-0"

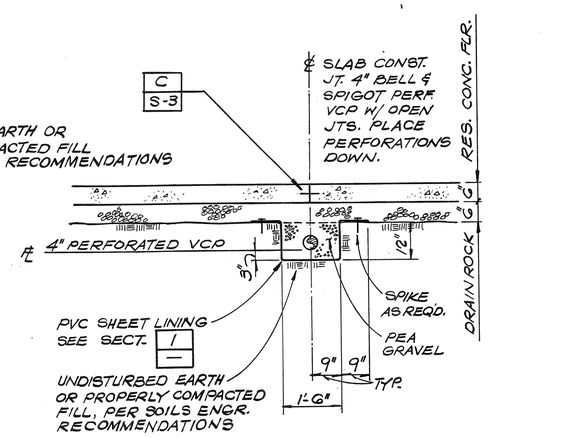

RESERVOIR UNDERDRAIN TYP. SECTION 2 / C-2

SCALE ½" = 1'-0"

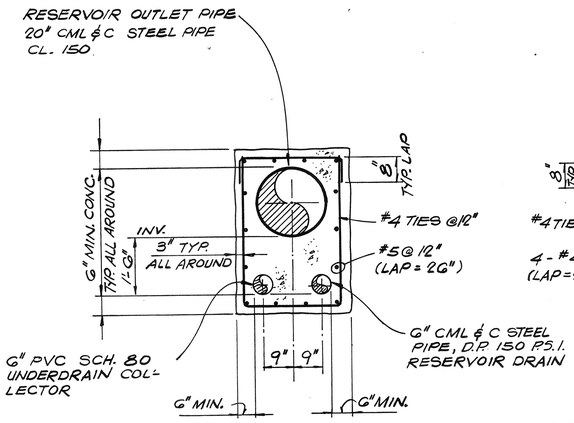

OUTLET PIPE ENCASEMENT TYPICAL SECTION 3 / C-2

SCALE: ½" = 1'-0"

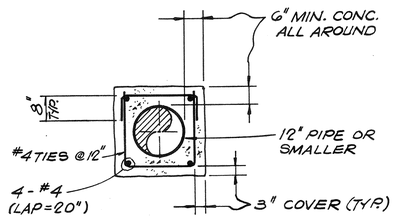

CONC. PIPE ENCASEMENT TYPICAL SECTION 4 / C-2

SCALE: ½" = 1'-0"

NOTE: SEE STRUCTURAL NOTES, SHT. S-1 FOR STEEL CLEARANCES.

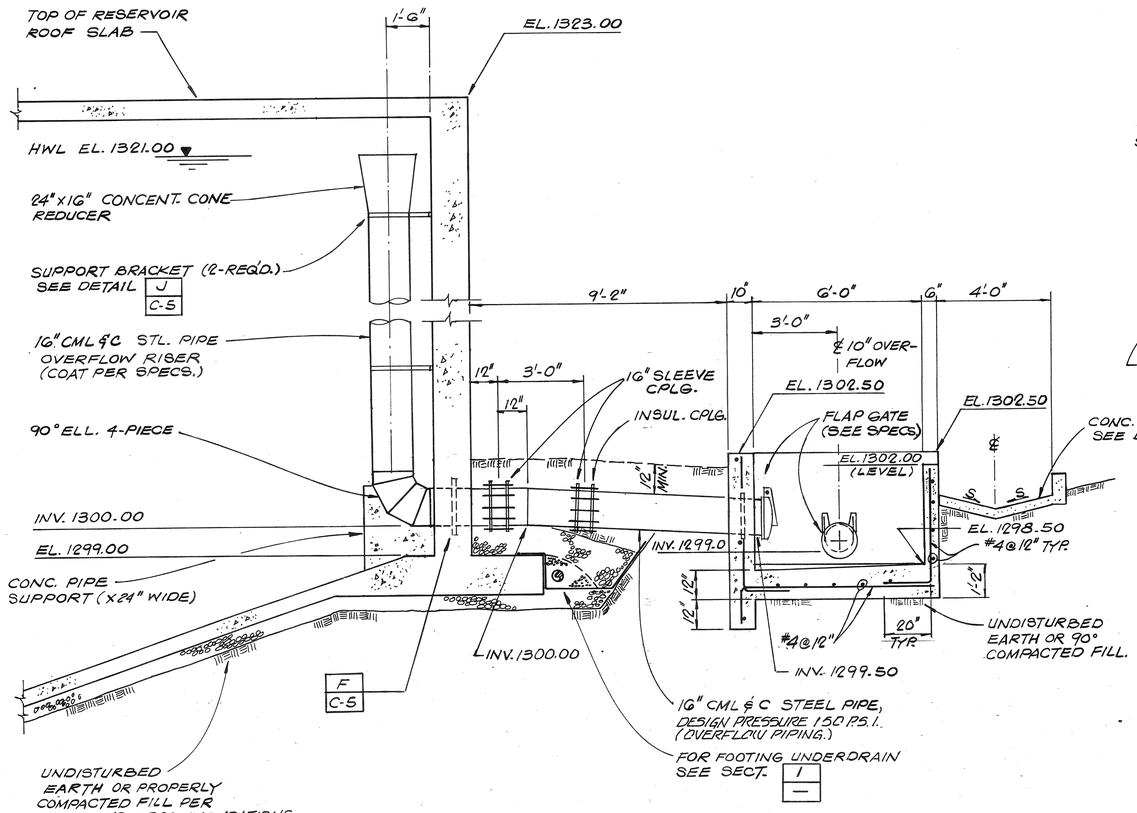

SECTION 5 / C-2

SCALE : ⅜" = 1'-0"

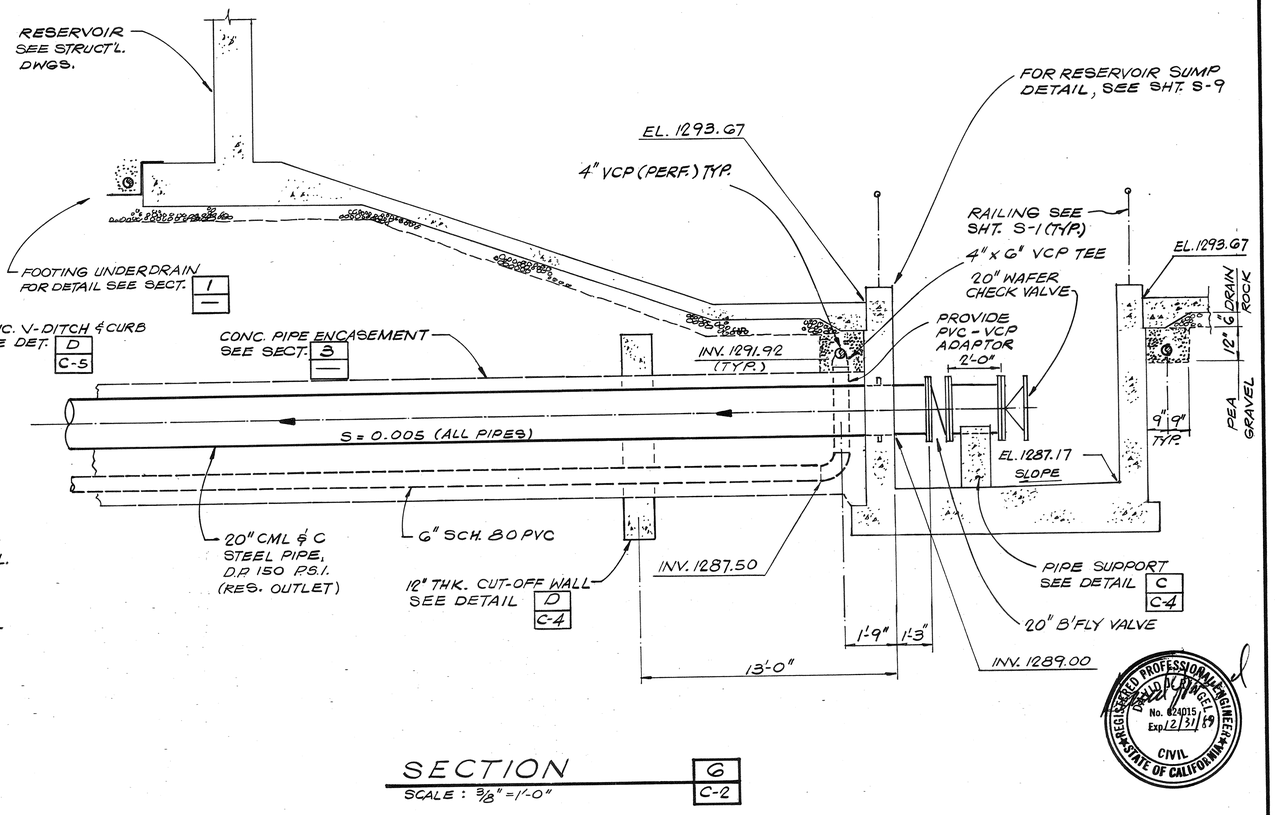

SECTION 6 / C-2

SCALE : ⅜" = 1'-0"

REGISTERED PROFESSIONAL ENGINEER — DAVID A. PHILLIPS — No. C24015 Exp. 12/31/89 — CIVIL — STATE OF CALIFORNIA

REV	DATE	BY	DESCRIPTION

SCALE: AS NOTED

DESIGNED J. Hanger
DRAWN V. Vasallo
CHECKED D. Phillips

SUBMITTED David A. Phillips — PROJECT ENGINEER — C24015 R.C.E. NO. — 4/28/88 DATE
RECOMMENDED Robert L. Stringer — JAMES M. MONTGOMERY CONSULTING ENGINEERS, INC. — 24656 R.C.E. NO. — 4/27/88 DATE

JAMES M. MONTGOMERY CONSULTING ENGINEERS, INC.

P.O. BOX 7009, 250 N. MADISON AVE., PASADENA, CA 91109-7009

JMM

APPROVED Joseph A. Lopez, R.C.E. 18692, City Engineer — 5/18/88 DATE
APPROVED _____ DATE

CITY OF SAN FERNANDO

WATER FACILITIES FOR ASSESSMENT DISTRICT NO. D-272

SECTIONS

SHEET C-3 OF 52 SHEETS

CC FILE JOB NO.

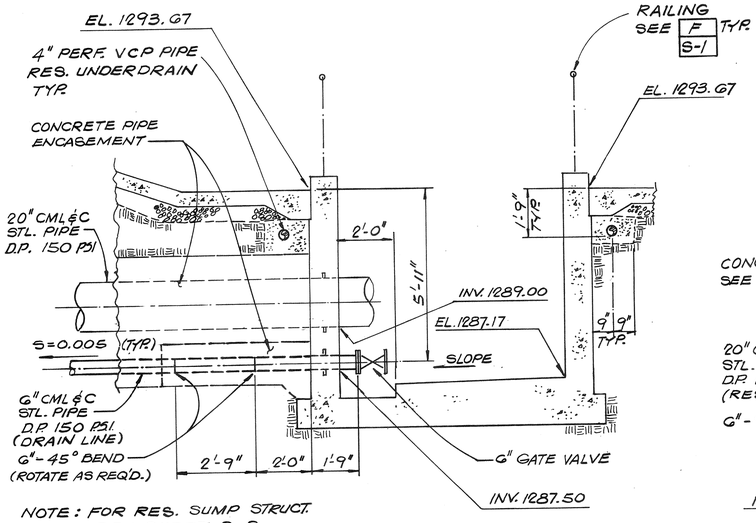

NOTE: FOR RES. SUMP STRUCT. DETAIL, SEE SHEET S-9

SECTION 1 C-2
SCALE: 3/8"=1'-0"

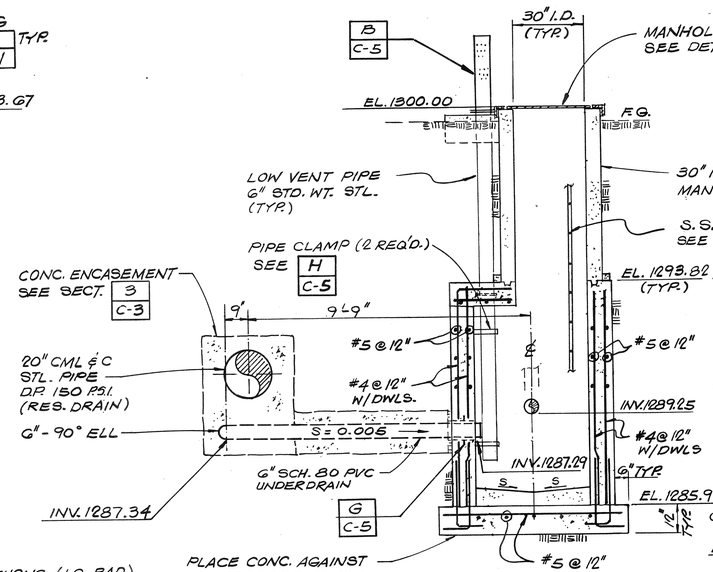

SECTION 2 C-2
SCALE: 3/8"=1'-0"

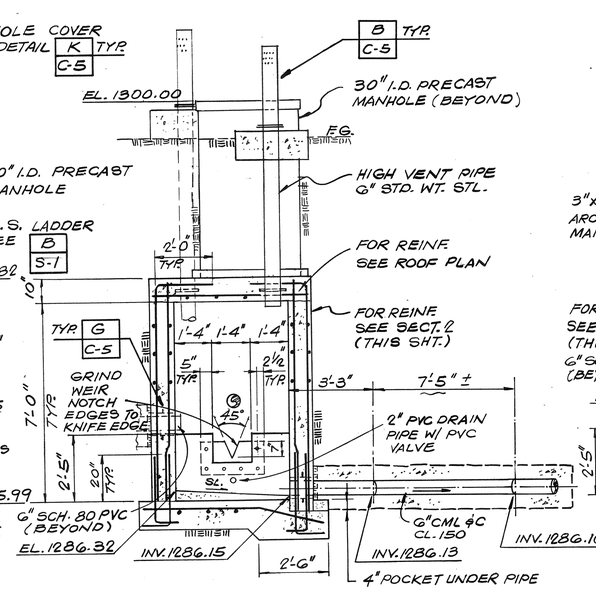

SECTION 3 C-2
SCALE: 3/8"=1'-0"

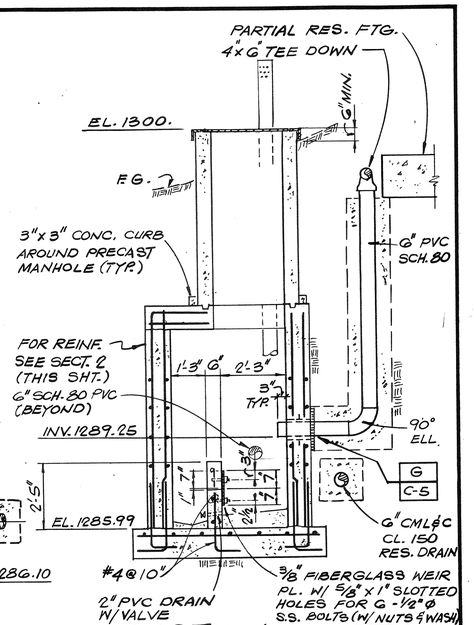

SECTION 4 C-2
SCALE: 3/8"=1'-0"

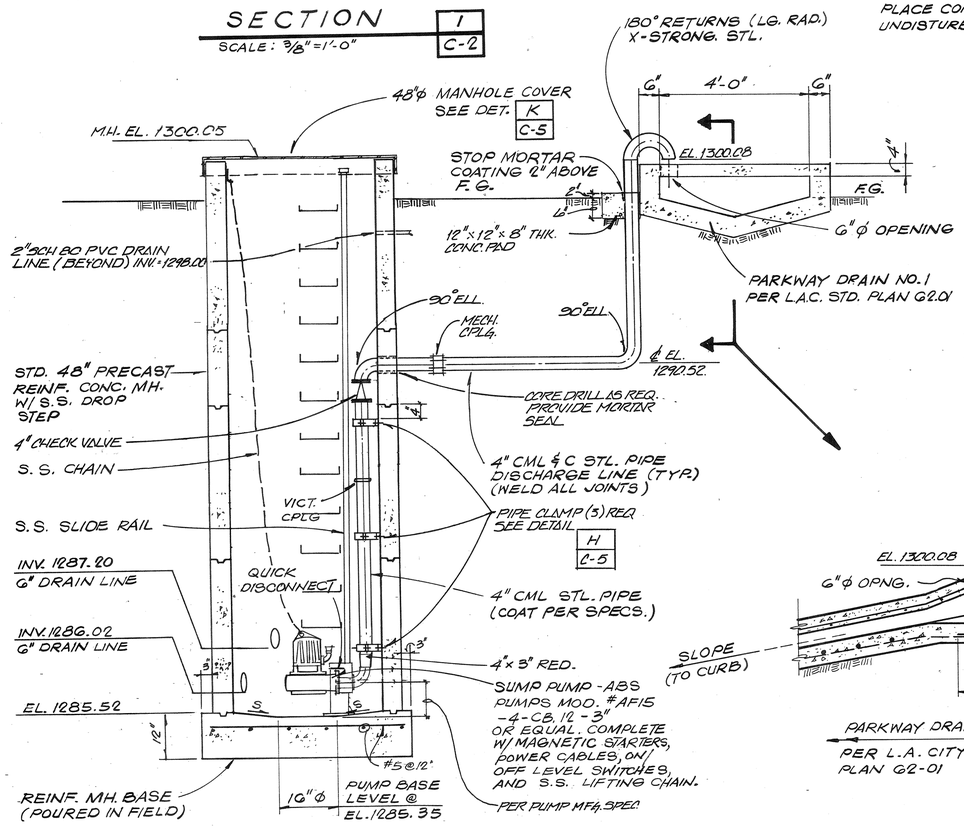

SECTION 5 C-2
SCALE: 1/2"=1'-0"

SECTION 6 C-2
SCALE: 1/2"=1'-0"

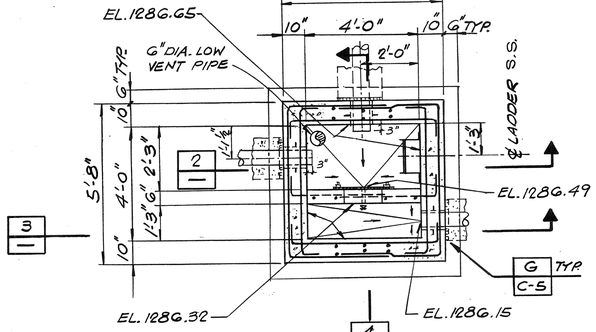

FLOOR PLAN A C-2
SCALE: 3/8"=1'-0"

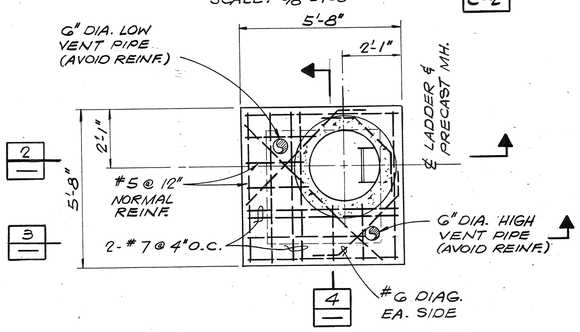

ROOF PLAN B —
SCALE: 3/8"=1'-0"

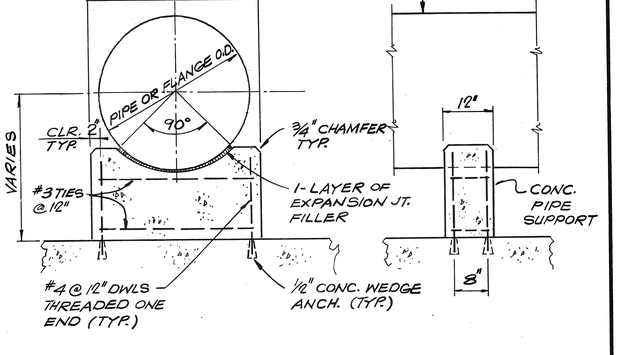

PIPE SUPPORT DETAIL C C-3
NO SCALE

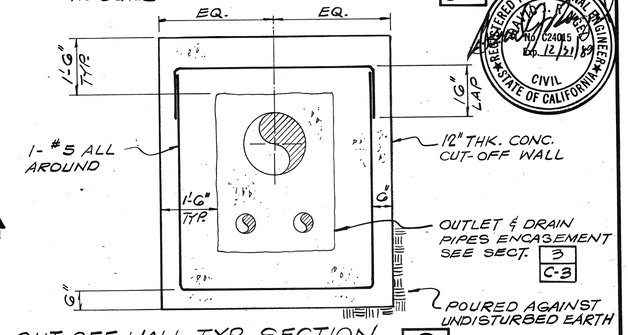

CUT-OFF WALL TYP. SECTION D C-2
NO SCALE

REGISTERED PROFESSIONAL ENGINEER JOSEPH R. LOPEZ No. C24015 EXP. 12/31/89 CIVIL STATE OF CALIFORNIA

REV	DATE	BY	DESCRIPTION

SCALE: AS NOTED

DESIGNED J. Lopez
DRAWN V. Vasallo
CHECKED R. Rivera

SUBMITTED Joseph R. Lopez PROJECT ENGINEER — C24015 R.C.E. NO. — 4/28/88 DATE

RECOMMENDED Richard R. Rivera JAMES M. MONTGOMERY CONSULTING ENGINEERS, INC. — 24656 R.C.E. NO. — 4/27/88 DATE

JAMES M. MONTGOMERY CONSULTING ENGINEERS, INC.
P.O. BOX 7009, 250 N. MADISON AVE., PASADENA, CA 91109-7009

APPROVED Joseph R. Lopez RCE 18649 City Engineer — 5/18/88 DATE

APPROVED _____ DATE

CITY OF SAN FERNANDO
WATER FACILITIES FOR ASSESSMENT DISTRICT NO. D-272
PLAN AND SECTIONS

SHEET C-4 OF 52 SHEETS

JOB NO. _____ FILE _____ CC

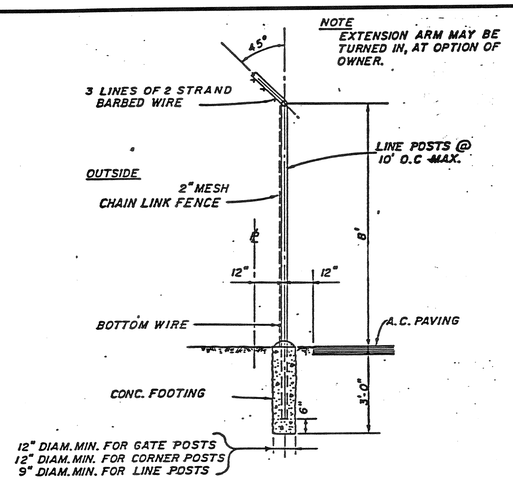

SPECIFICATION

BARBED WIRE: 2 STRANDS OF NO. 12½ STEEL WIRE W/4 POINT BARBS.
FABRIC: Nº 9 GALV. STEEL WIRE, 2" MESH.
FABRIC TIES: Nº 9 GALV. STEEL WIRE SPACED 14" APART ON POSTS AND 24" APART ON RAILS.
CORNER POST: 3" O.D. PIPE, 5.79 #/FT.
LINE POSTS: 2.25" H-COLUMN SECTION, 4.1 #/FT. OR STD. WEIGHT 2½" O.D. PIPE, 3.65 #/FT.
SWING GATE POSTS: 4" O.D. PIPE, 9.1 #/FT.
TOP RAIL & BRACES: 1 5/8" O.D. PIPE, 2.27 #/FT. OR 1 1/2" x 1 5/16" H-COLUMN SECTION, 2.00 #/FT.
BOTTOM WIRE: COIL SPRING WIRE 7 GA.
ALL FENCING MATERIALS: TO BE HOT-DIPPED GALVANIZED AFTER FABRICATION.

CHAIN-LINK FENCE DETAIL — A / C-1

NO SCALE

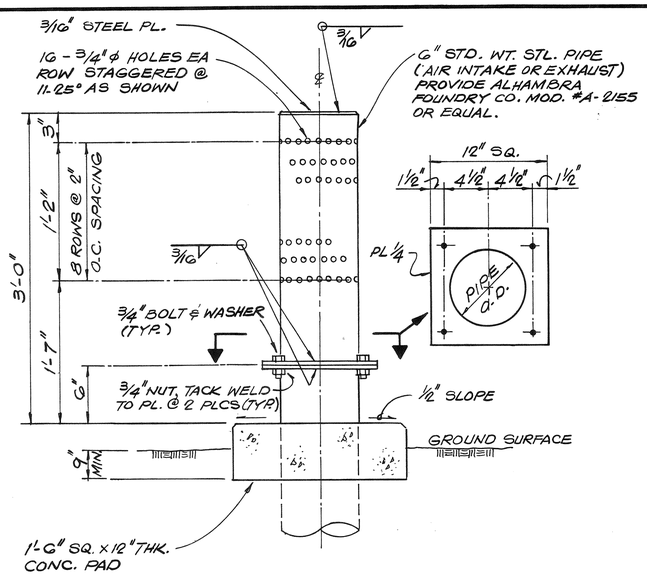

NOTE: VENT PIPE ASSEMBLY TO BE GALV. AFTER FAB.

AIR VENT DETAIL — B / C-4

NO SCALE

NOTE: SEE STRUCTURAL DRAWINGS FOR STEEL CLEARANCES.

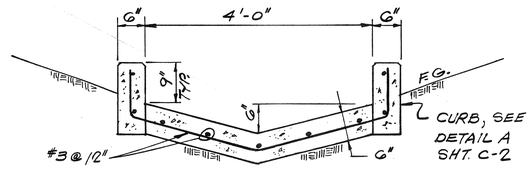

TYP. CONC. V-DITCH — D / C-2

3/4" = 1'-0"

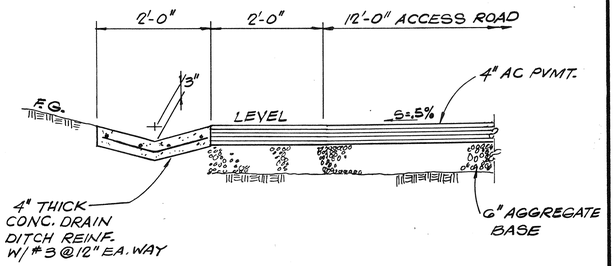

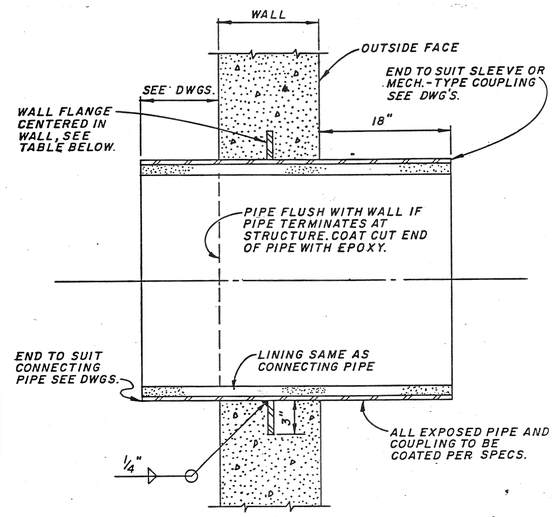

WALL FLANGE PLATE THICKNESS

PIPE SIZE	STEEL PLATE
30" & UNDER	1/4"
31" TO 60"	5/16"
61" & OVER	3/8"

STL. PIPE THRU OR TERMINATING @ WALL — F / C-2

NO SCALE

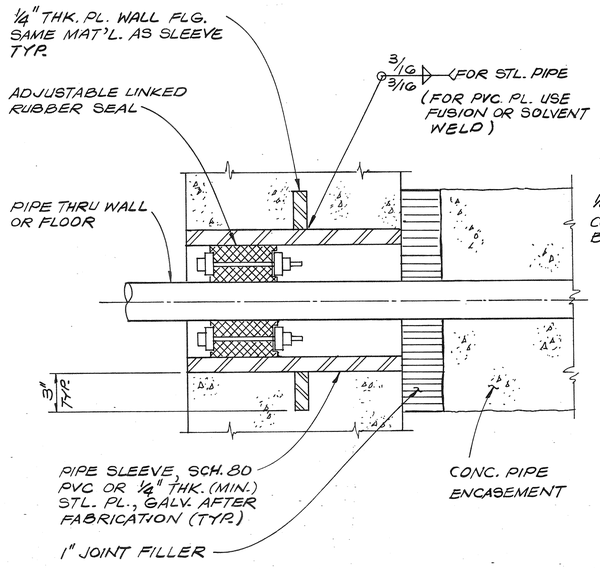

SLEEVED PIPE OPENING — G / C-2

NO SCALE

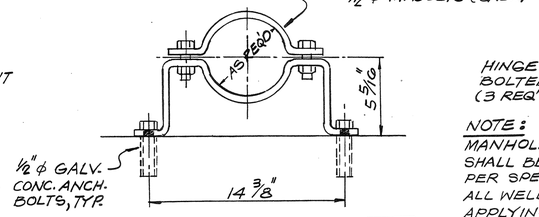

PIPE CLAMP — H / C-4

NO SCALE

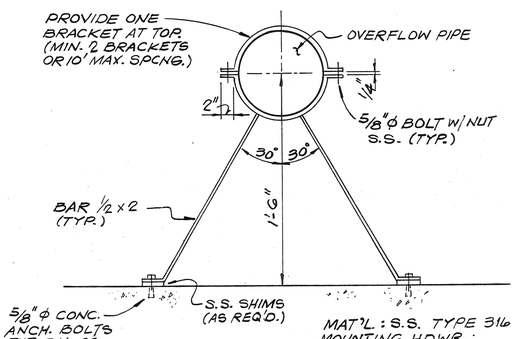

PIPE BRACKET — J / C-3

NO SCALE

DETAIL — E / C-1

3/4" = 1'-0"

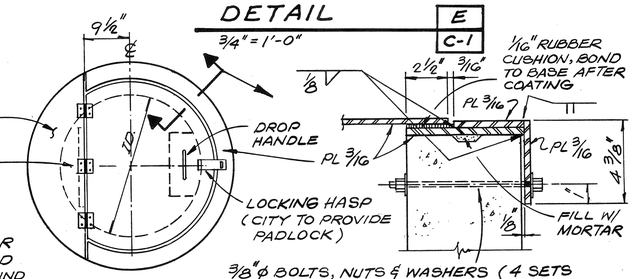

NOTE: MANHOLE COVER SHALL BE COATED PER SPECS. GRIND ALL WELDS BEFORE APPLYING COATING.

MANHOLE COVER DETAIL — K / C-4

NO SCALE

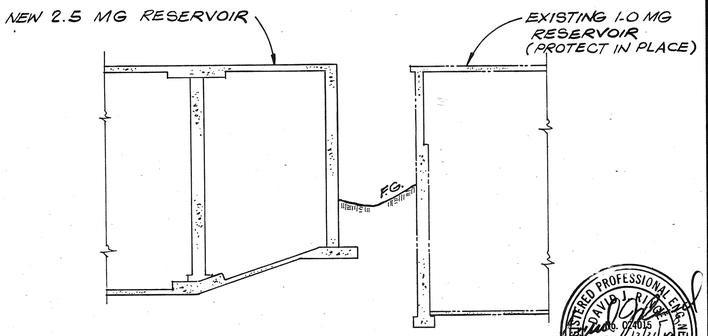

SECTION — 1 / C-1

SCALE 1" = 10'

REGISTERED PROFESSIONAL ENGINEER DANIEL J. RING No. 17406, 07/2015 Exp. 12/31/89 CIVIL STATE OF CALIFORNIA

REV	DATE	BY	DESCRIPTION

SCALE: AS NOTED

DESIGNED [illegible]
DRAWN V. Vgualle
CHECKED [illegible]

SUBMITTED [illegible] PROJECT ENGINEER — C24015 R.C.E. NO. — 4/28/88 DATE
RECOMMENDED [illegible] JAMES M. MONTGOMERY CONSULTING ENGINEERS, INC. — 24656 R.C.E. NO. — 4/28/88 DATE

JAMES M. MONTGOMERY CONSULTING ENGINEERS, INC.
P.O. BOX 7009, 250 N. MADISON AVE., PASADENA, CA 91109-7009

APPROVED Joseph R. Ingraffia RCE 18642 City Engineer — 5/18/88 DATE
APPROVED — DATE

CITY OF SAN FERNANDO
WATER FACILITIES FOR ASSESSMENT DISTRICT NO. D-272
SECTION AND DETAILS

SHEET C-5 OF 52 SHEETS

CC FILE JOB NO.

C-C-19

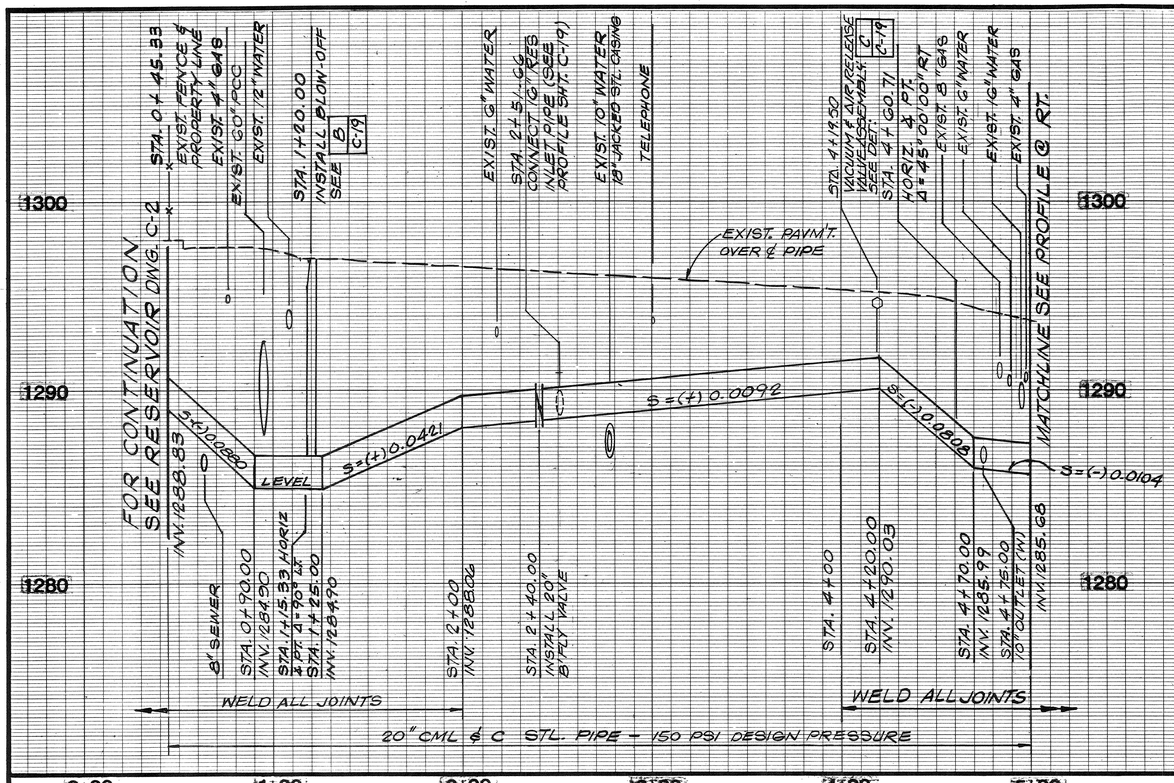

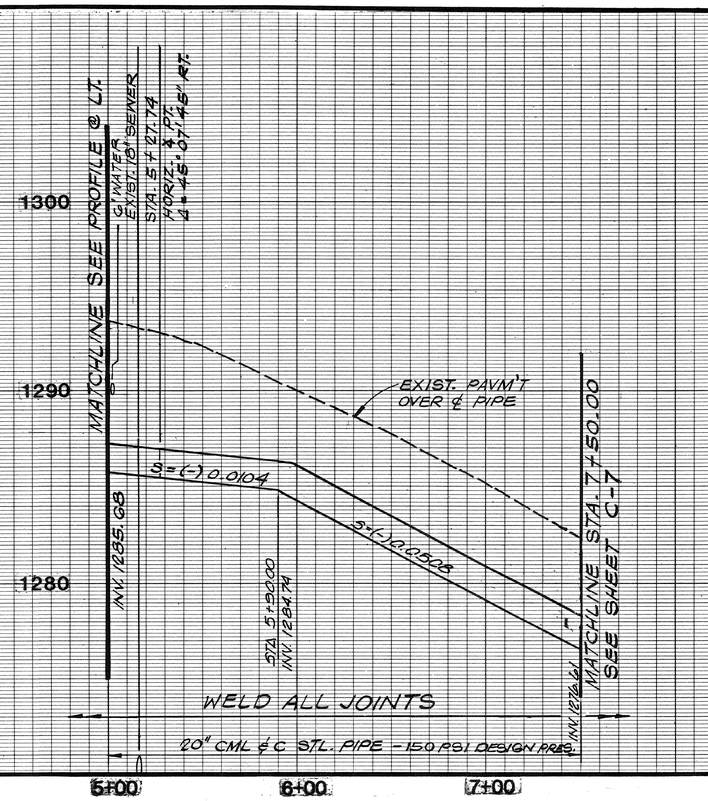

Note:
Schedule A = Reservoir Construction
Schedule B = Pipeline Construction
Contractor to provide temporary Bulkheads at point of interconnection of Schedules A & B.
After testing of each schedule, make connection to pipeline with Butt Strap w/ Handhole.

PROFILE

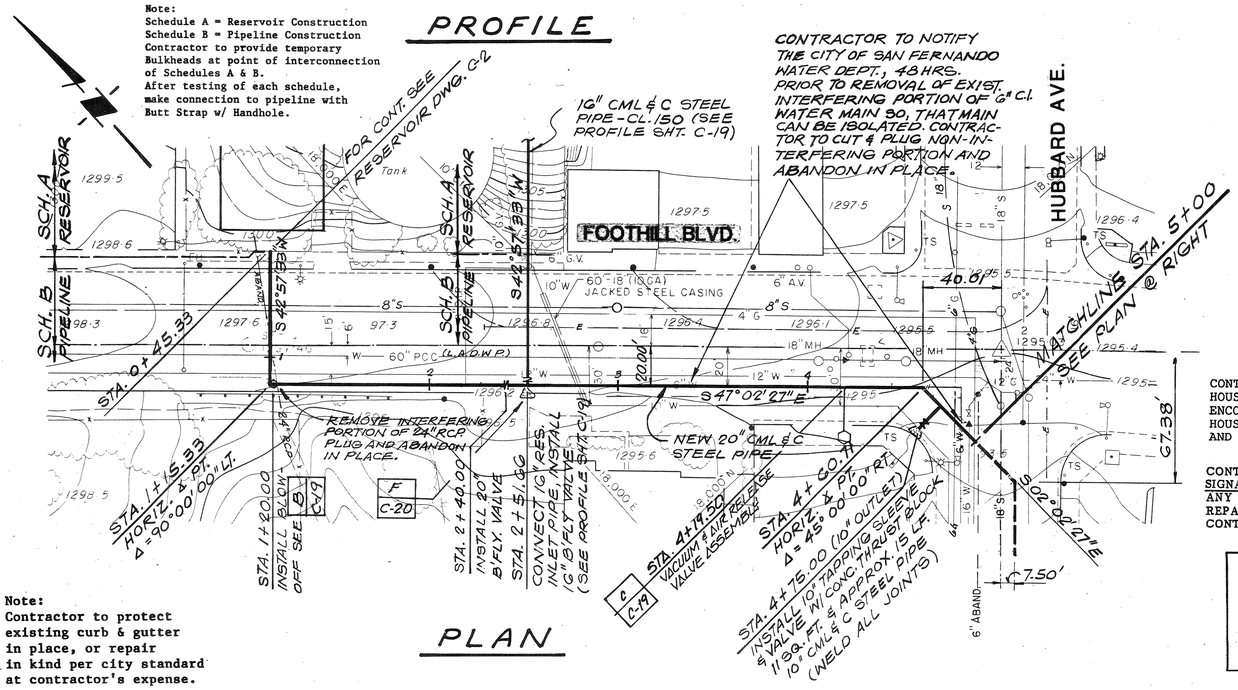

Note:
Contractor to protect existing curb & gutter in place, or repair in kind per city standard at contractor's expense.

PLAN

CONTRACTOR TO NOTIFY THE CITY OF SAN FERNANDO WATER DEPT., 48 HRS. PRIOR TO REMOVAL OF EXIST. INTERFERING PORTION OF 6" C.I. WATER MAIN SO, THAT MAIN CAN BE ISOLATED. CONTRACTOR TO CUT & PLUG NON-INTERFERING PORTION AND ABANDON IN PLACE.

CONTRACTOR TO PROTECT EXISTING SEWER HOUSE CONNECTIONS. WHERE INTERFERENCE IS ENCOUNTERED, CONTRACTOR SHALL RELOCATE HOUSE CONNECTIONS AS SHOWN ON SHEETS C-20 AND C-22.

CONTRACTOR TO DETERMINE LOCATION OF TRAFFIC SIGNAL CONDUITS AND LOOPS PRIOR TO EXCAVATION. ANY DAMAGE TO EXISTING SYSTEM SHALL BE REPAIRED PER OWNER'S REQUIREMENTS AT THE CONTRACTOR'S EXPENSE.

UNDERGROUND SERVICE ALERT
1-800-422-4133
CALL USA/SC
FOR UNDERGROUND LOCATING
2 WORKING DAYS BEFORE YOU DIG.

PROFILE

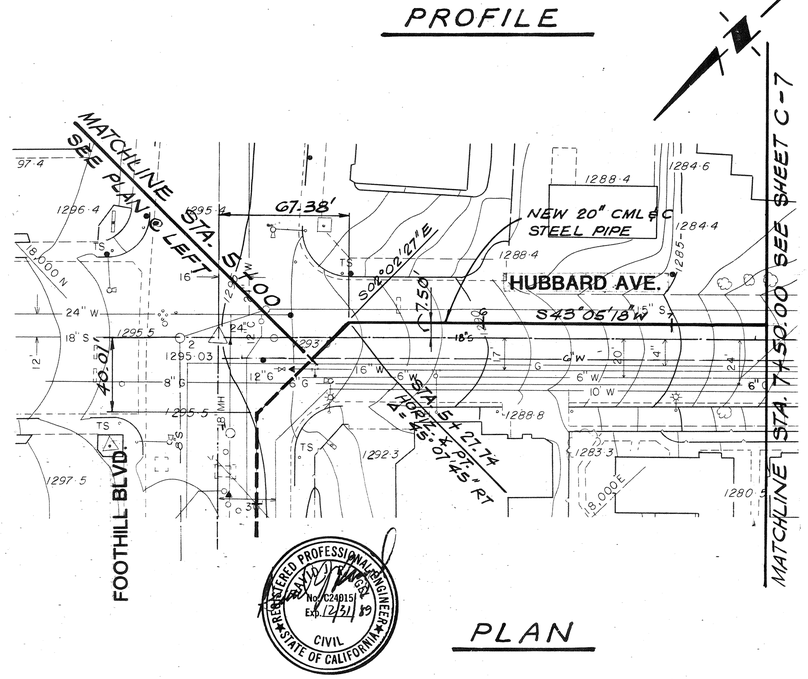

REGISTERED PROFESSIONAL ENGINEER
RAYMOND J. POPE
No. RCE 18642
Exp. 12/31/89
CIVIL
STATE OF CALIFORNIA

PLAN

REV	DATE	BY	DESCRIPTION

SCALE: V: 1" = 4' H: 1" = 40'

DESIGNED [signature]
DRAWN V. Vasallo
CHECKED [signature]

SUBMITTED [signature] PROJECT ENGINEER — C24015 R.C.E. NO. — 4/28/88 DATE

RECOMMENDED [signature] JAMES M. MONTGOMERY CONSULTING ENGINEERS, INC. — 24656 R.C.E. NO. — 4/28/88 DATE

JAMES M. MONTGOMERY CONSULTING ENGINEERS, INC.
P.O. BOX 7009, 250 N. MADISON AVE., PASADENA, CA 91109-7009

APPROVED [signature] Joseph R. Pope, RCE 18642 City Engineer — 5/18/88 DATE

APPROVED _____ DATE _____

CITY OF SAN FERNANDO
WATER FACILITIES FOR ASSESSMENT DISTRICT NO. D-272
PLAN AND PROFILE
FOOTHILL BL. TO HUBBARD AV. - STA. 0 + 45.33 TO STA. 7 + 50.00

SHEET C-6 OF 52 SHEETS

WESTERN AERIAL SURVEYS
RIVERSIDE VENTURA

JOB NO. _____ FILE _____ CC _____

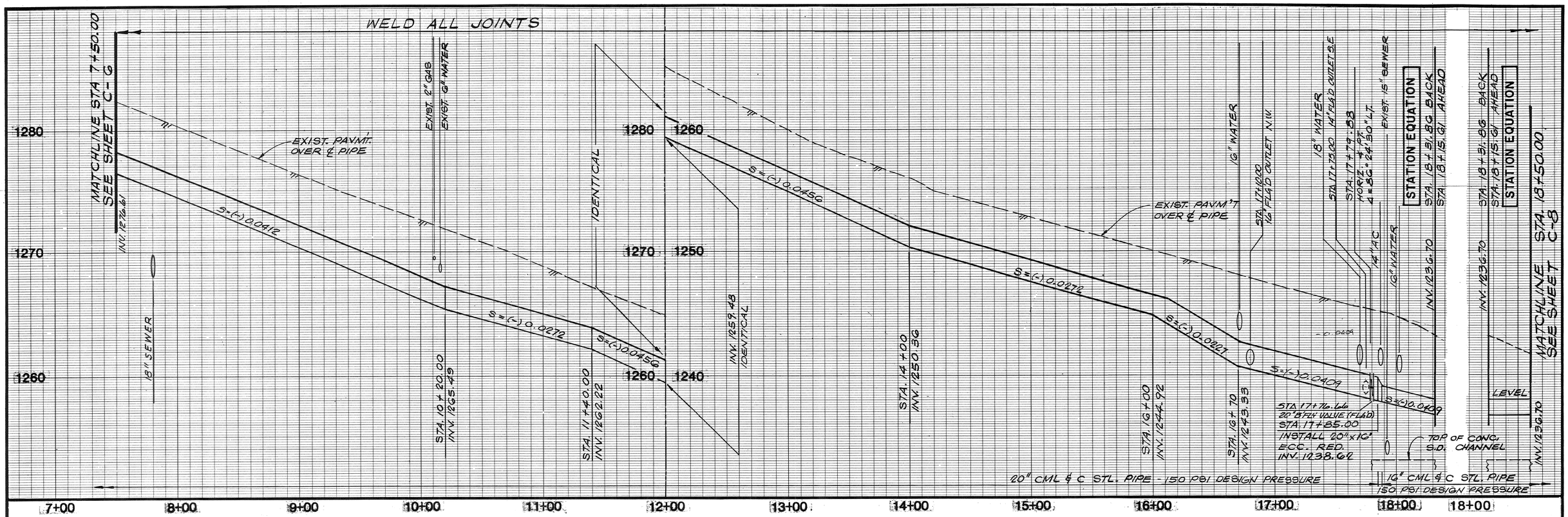

PROFILE

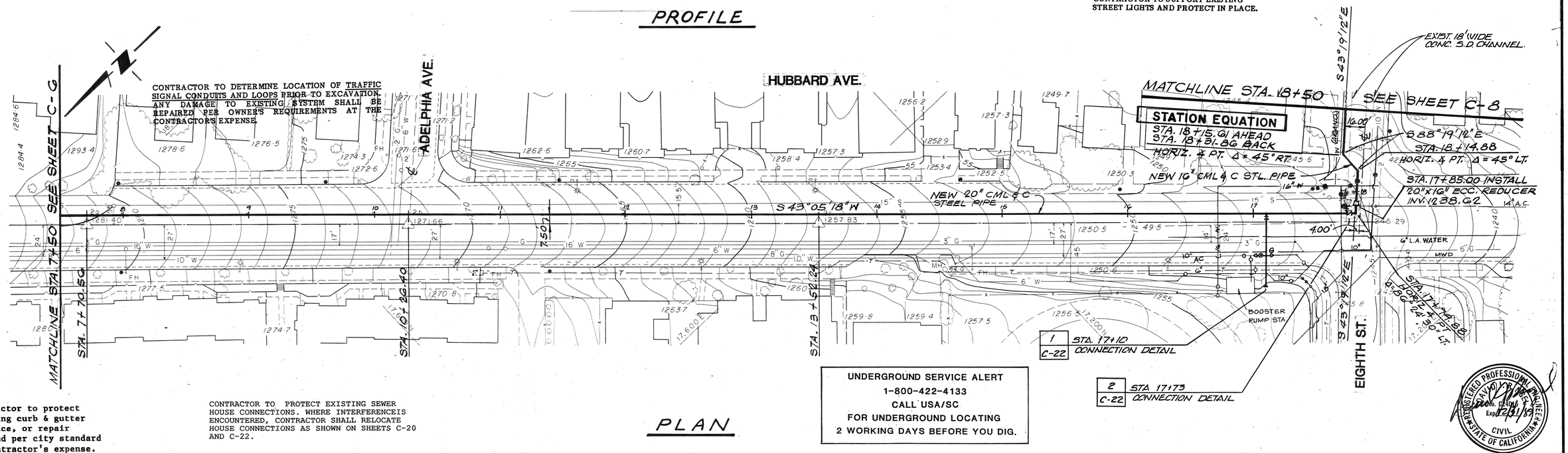

PLAN

Note:
Contractor to protect existing curb & gutter in place, or repair in kind per city standard at contractor's expense.

CONTRACTOR TO PROTECT EXISTING SEWER HOUSE CONNECTIONS. WHERE INTERFERENCEIS ENCOUNTERED, CONTRACTOR SHALL RELOCATE HOUSE CONNECTIONS AS SHOWN ON SHEETS C-20 AND C-22.

REGISTERED PROFESSIONAL ENGINEER — RAYMOND R. VOLK — No. C 21016 — Exp. 12/31/09 — CIVIL — STATE OF CALIFORNIA

REV	DATE	BY	DESCRIPTION

SCALE: V: 1"=4' H: 1"=40'

DESIGNED J. Kang
DRAWN V. Vasallo
CHECKED R. Lee

SUBMITTED Jerrold Ploszaj — PROJECT ENGINEER — C 24015 R.C.E. NO. — 4/27/08 DATE
RECOMMENDED Richard Montgomery — JAMES M. MONTGOMERY CONSULTING ENGINEERS, INC. — 22636 R.C.E. NO. — 4/27/08 DATE

JAMES M. MONTGOMERY CONSULTING ENGINEERS, INC.
P.O. BOX 7009, 250 N. MADISON AVE., PASADENA, CA 91109-7009

APPROVED Joseph R. Ingoglia, RCE 18672 — City Engineer — 5/18/08 DATE
APPROVED _____ DATE

CITY OF SAN FERNANDO
WATER FACILITIES FOR ASSESSMENT DISTRICT NO. D-272
PLAN AND PROFILE
HUBBARD AVE. TO EIGHTH ST. - STA. 7+50 TO STA 18+50

SHEET C-7 OF 52 SHEETS

WESTERN AERIAL SURVEYS
RIVERSIDE VENTURA

JOB NO. _____ FILE _____ CC _____

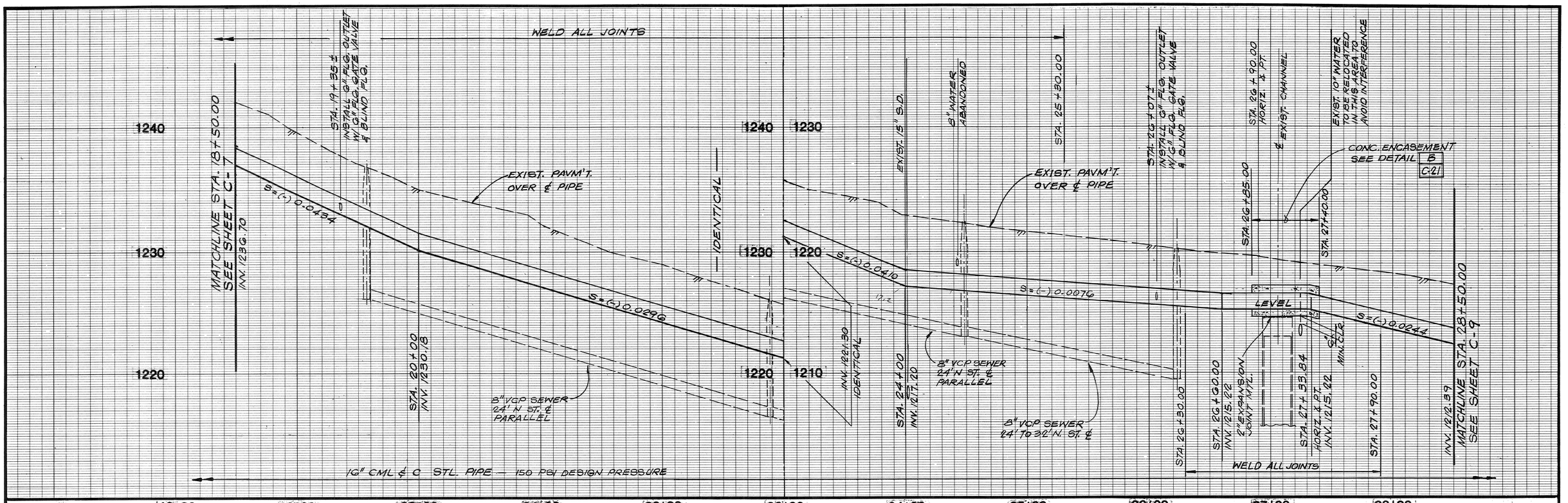

REV	DATE	BY	DESCRIPTION

SCALE: V: 1"=4' H: 1"=40'

DESIGNED J. Hung
DRAWN V. Vasallo
CHECKED [illegible]

SUBMITTED [illegible] PROJECT ENGINEER — C24015 R.C.E. NO. — 4/27/88 DATE

RECOMMENDED [illegible] JAMES M. MONTGOMERY CONSULTING ENGINEERS, INC. — 24656 R.C.E. NO. — 4/27/88 DATE

JAMES M. MONTGOMERY CONSULTING ENGINEERS, INC. JMM

P.O. BOX 7009, 250 N. MADISON AVE., PASADENA, CA 91109-7009

APPROVED [illegible] City Engineer — 5/18/88 DATE

APPROVED _____ DATE

CITY OF SAN FERNANDO

WATER FACILITIES FOR ASSESSMENT DISTRICT NO. D-272

PLAN AND PROFILE

EIGHTH ST. – STA. 18+50 TO STA. 28+50

SHEET C-8 OF 52 SHEETS

WESTERN AERIAL SURVEYS
RIVERSIDE VENTURA

JOB NO. _____ FILE _____ CC

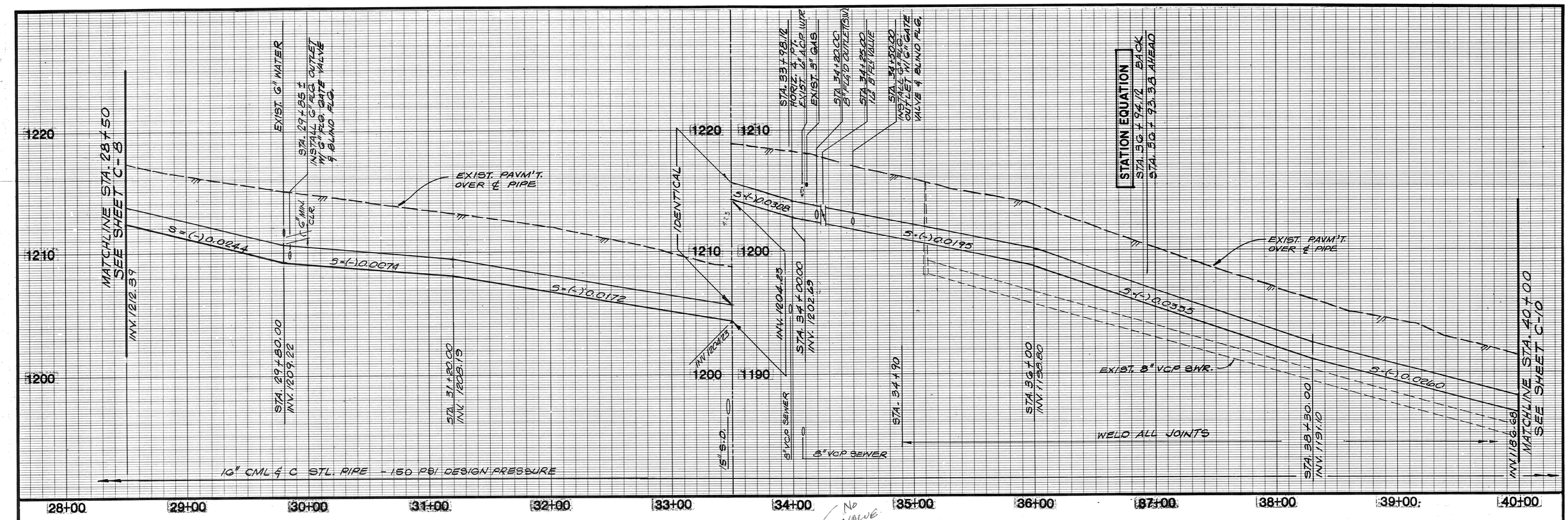

CONTRACTOR TO PROTECT EXISTING SEWER HOUSE CONNECTIONS. WHERE INTERFERENCE IS ENCOUNTERED, CONTRACTOR SHALL RELOCATE HOUSE CONNECTIONS AS SHOWN ON SHEETS C-20 AND C-22.

CONTRACTOR TO FIELD VERIFY LOCATION OF ALL EXISTING FIRE HYDRANTS PRIOR TO FABRICATION OF 6-INCH FLANGED OUTLETS.

Note:
Contractor to protect existing curb & gutter in place, or repair in kind per city standard at contractor's expense.

UNDERGROUND SERVICE ALERT
1-800-422-4133
CALL USA/SC
FOR UNDERGROUND LOCATING
2 WORKING DAYS BEFORE YOU DIG.

REGISTERED PROFESSIONAL ENGINEER
No. C24015
Exp. 12/31/89
CIVIL
STATE OF CALIFORNIA

REV	DATE	BY	DESCRIPTION

SCALE: V: 1" = 4' H: 1" = 40'

DESIGNED [signature]
DRAWN V. Vasallo
CHECKED [signature]

SUBMITTED [signature] PROJECT ENGINEER — C 24015 R.C.E. NO. — 4/27/88 DATE
RECOMMENDED [signature] JAMES M. MONTGOMERY CONSULTING ENGINEERS, INC. — 24656 R.C.E. NO. — 4/27/88 DATE

JAMES M. MONTGOMERY CONSULTING ENGINEERS, INC.
P.O. BOX 7009, 250 N. MADISON AVE., PASADENA, CA 91109-7009

APPROVED [signature] RCE 18,642 City Engineer — 5/18/88 DATE
APPROVED _____ DATE

CITY OF SAN FERNANDO
WATER FACILITIES FOR ASSESSMENT DISTRICT NO. D-272
PLAN AND PROFILE
EIGHTH ST. - STA. 28+50 TO STA. 40+00

SHEET C-9 OF 52 SHEETS

WESTERN AERIAL SURVEYS
RIVERSIDE VENTURA

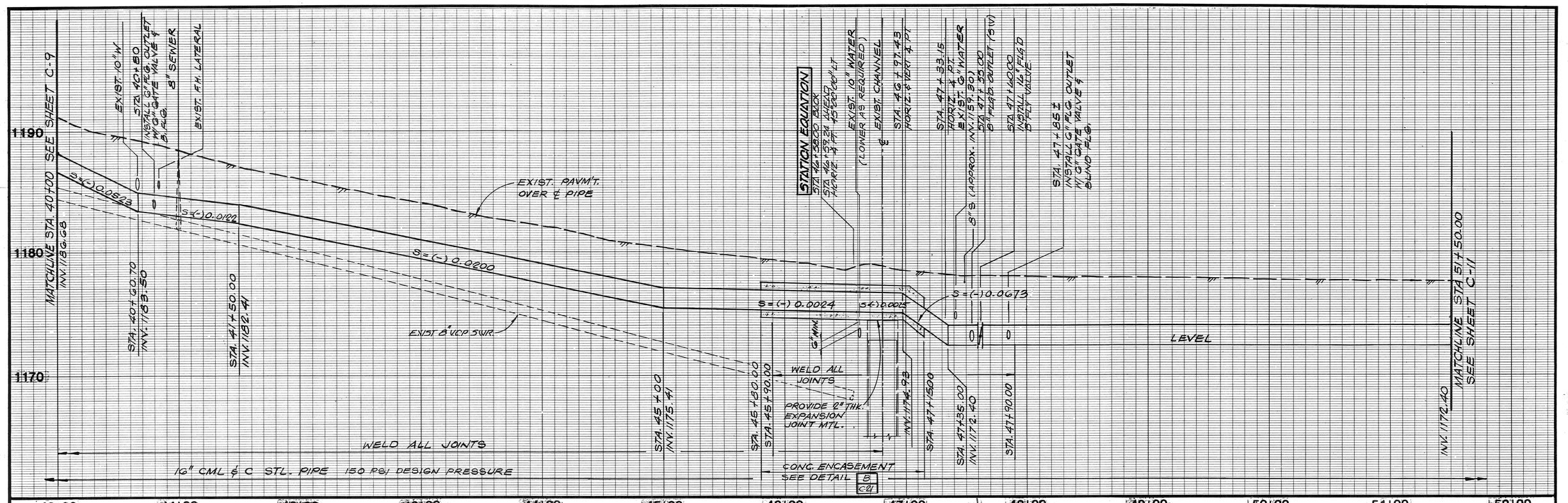

PROFILE

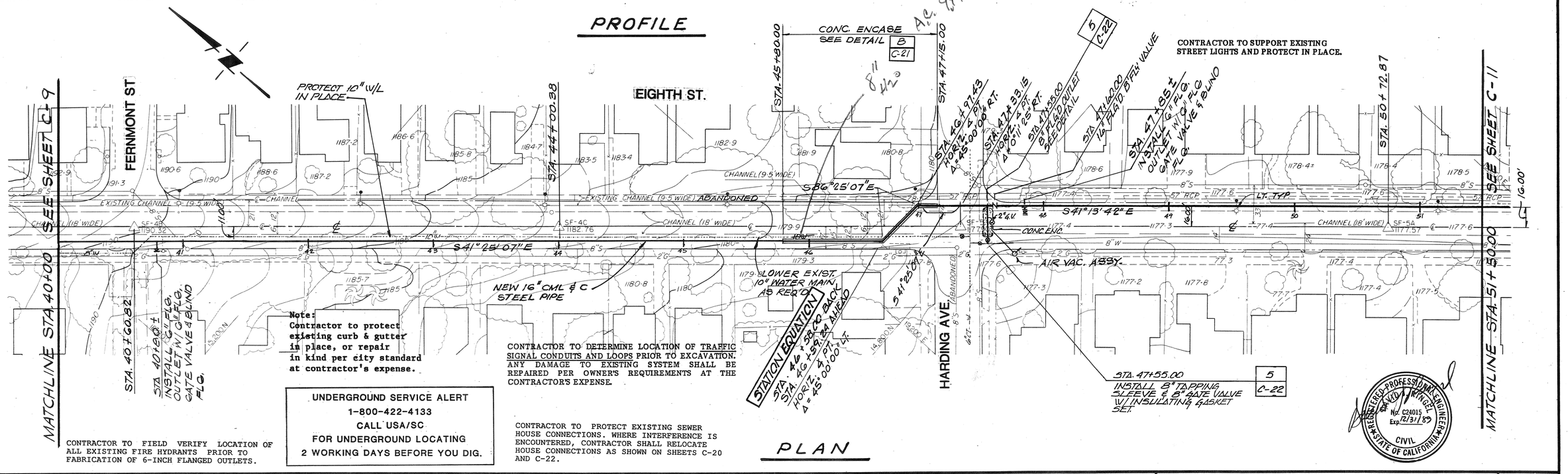

Note: Contractor to protect existing curb & gutter in place, or repair in kind per city standard at contractor's expense.

UNDERGROUND SERVICE ALERT
1-800-422-4133
CALL USA/SC
FOR UNDERGROUND LOCATING
2 WORKING DAYS BEFORE YOU DIG.

CONTRACTOR TO DETERMINE LOCATION OF TRAFFIC SIGNAL CONDUITS AND LOOPS PRIOR TO EXCAVATION. ANY DAMAGE TO EXISTING SYSTEM SHALL BE REPAIRED PER OWNER'S REQUIREMENTS AT THE CONTRACTOR'S EXPENSE.

CONTRACTOR TO FIELD VERIFY LOCATION OF ALL EXISTING FIRE HYDRANTS PRIOR TO FABRICATION OF 6-INCH FLANGED OUTLETS.

CONTRACTOR TO PROTECT EXISTING SEWER HOUSE CONNECTIONS. WHERE INTERFERENCE IS ENCOUNTERED, CONTRACTOR SHALL RELOCATE HOUSE CONNECTIONS AS SHOWN ON SHEETS C-20 AND C-22.

PLAN

REV	DATE	BY	DESCRIPTION

SCALE: V: 1"=4' H: 1"=40'

DESIGNED
DRAWN V Vasallo
CHECKED

SUBMITTED — PROJECT ENGINEER — C24015 R.C.E. NO. — 4/27/88 DATE

RECOMMENDED — JAMES M. MONTGOMERY CONSULTING ENGINEERS, INC. — 24656 R.C.E. NO. — 4/27/88 DATE

JAMES M. MONTGOMERY CONSULTING ENGINEERS, INC.
P.O. BOX 7009, 250 N. MADISON AVE., PASADENA, CA 91109-7009

APPROVED — George Lopez RCE 18642 — City Engineer — 5/18/88 DATE

APPROVED — DATE

CITY OF SAN FERNANDO
WATER FACILITIES FOR ASSESSMENT DISTRICT NO. D-272
PLAN AND PROFILE
EIGHTH ST. - STA. 40+00 TO STA. 51+50

SHEET C-10 OF 52 SHEETS

REGISTERED PROFESSIONAL ENGINEER — STATE OF CALIFORNIA — No. C24015 Exp. 12/31/89 — CIVIL

WESTERN AERIAL SURVEYS
RIVERSIDE VENTURA

JOB NO. FILE CC

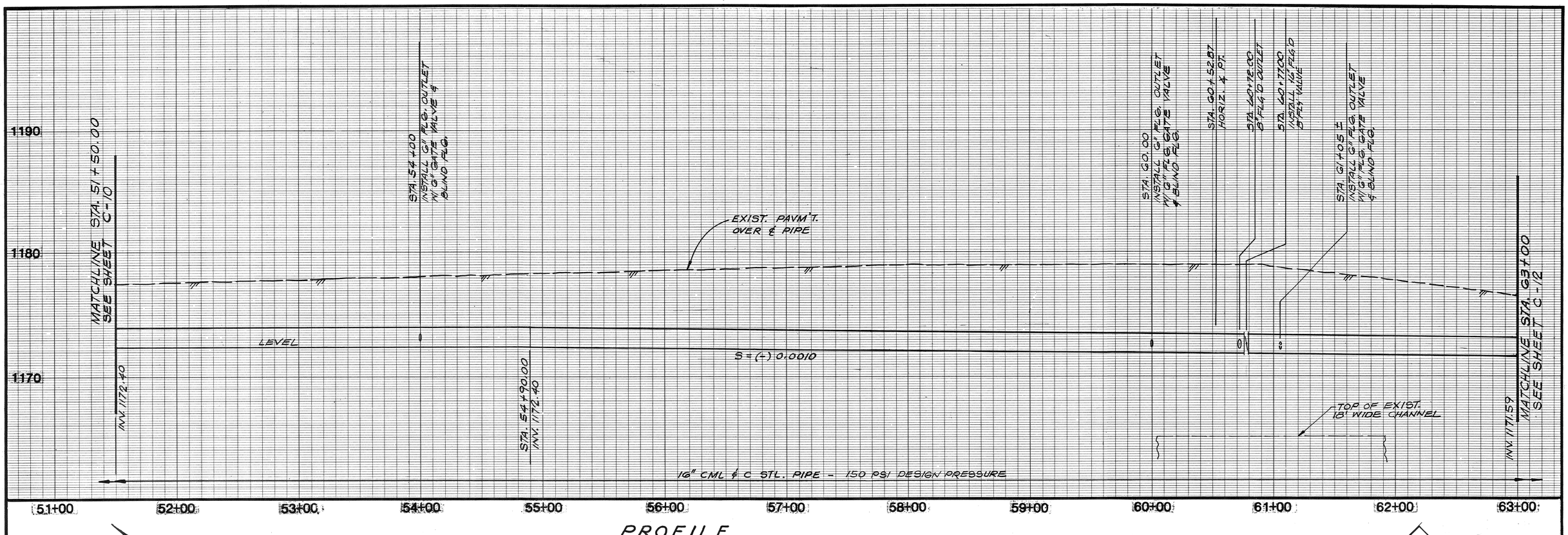

PROFILE

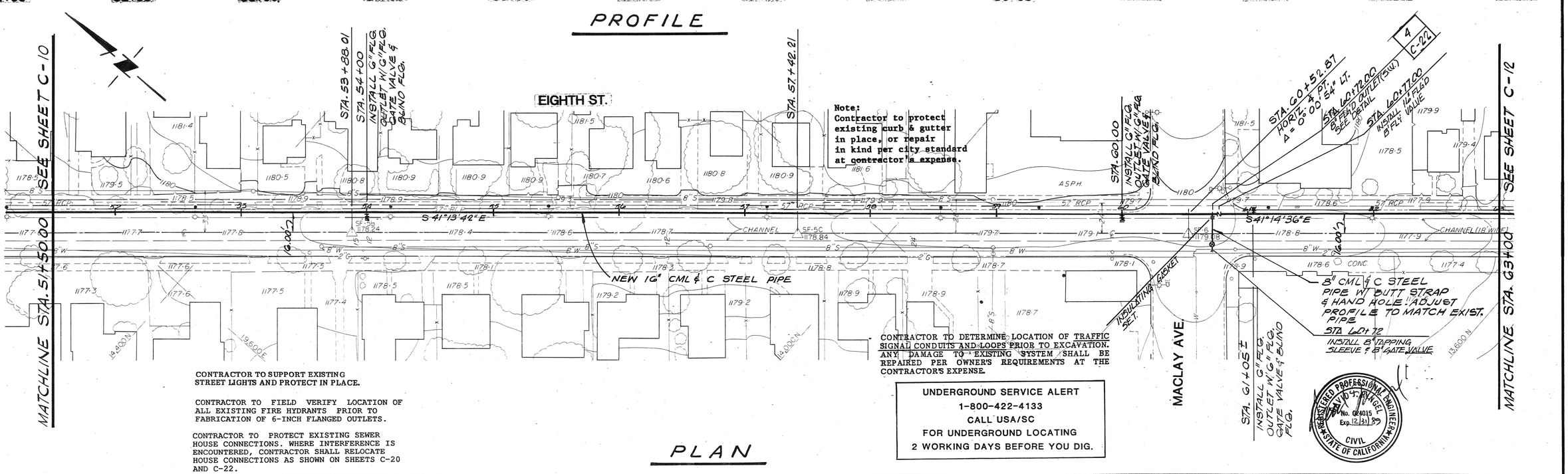

CONTRACTOR TO SUPPORT EXISTING STREET LIGHTS AND PROTECT IN PLACE.

CONTRACTOR TO FIELD VERIFY LOCATION OF ALL EXISTING FIRE HYDRANTS PRIOR TO FABRICATION OF 6-INCH FLANGED OUTLETS.

CONTRACTOR TO PROTECT EXISTING SEWER HOUSE CONNECTIONS. WHERE INTERFERENCE IS ENCOUNTERED, CONTRACTOR SHALL RELOCATE HOUSE CONNECTIONS AS SHOWN ON SHEETS C-20 AND C-22.

CONTRACTOR TO DETERMINE LOCATION OF TRAFFIC SIGNAL CONDUITS AND LOOPS PRIOR TO EXCAVATION. ANY DAMAGE TO EXISTING SYSTEM SHALL BE REPAIRED PER OWNER'S REQUIREMENTS AT THE CONTRACTOR'S EXPENSE.

UNDERGROUND SERVICE ALERT
1-800-422-4133
CALL USA/SC
FOR UNDERGROUND LOCATING
2 WORKING DAYS BEFORE YOU DIG.

REGISTERED PROFESSIONAL ENGINEER DAVID J. RINGEL No. 024015 Exp. 12/31/89 CIVIL STATE OF CALIFORNIA

PLAN

REV	DATE	BY	DESCRIPTION

SCALE: V: 1" = 4' H: 1" = 40'

DESIGNED [signature]
DRAWN V. Vasallo
CHECKED [signature]

SUBMITTED [signature] PROJECT ENGINEER — C24015 R.C.E. NO. — 4/27/88 DATE

RECOMMENDED [signature] JAMES M. MONTGOMERY CONSULTING ENGINEERS, INC. — 24656 R.C.E. NO. — 4/27/88 DATE

JAMES M. MONTGOMERY CONSULTING ENGINEERS, INC.
P.O. BOX 7009, 250 N. MADISON AVE., PASADENA, CA 91109-7009

APPROVED [signature] RCE 18642 City Engineer — 5/18/88 DATE
APPROVED — DATE

CITY OF SAN FERNANDO
WATER FACILITIES FOR ASSESSMENT DISTRICT NO. D-272
PLAN AND PROFILE
EIGHTH ST. - STA. 51+50 TO STA. 63+00

SHEET C-11 OF 52 SHEETS

WESTERN AERIAL SURVEYS
RIVERSIDE VENTURA

JOB NO. FILE CC

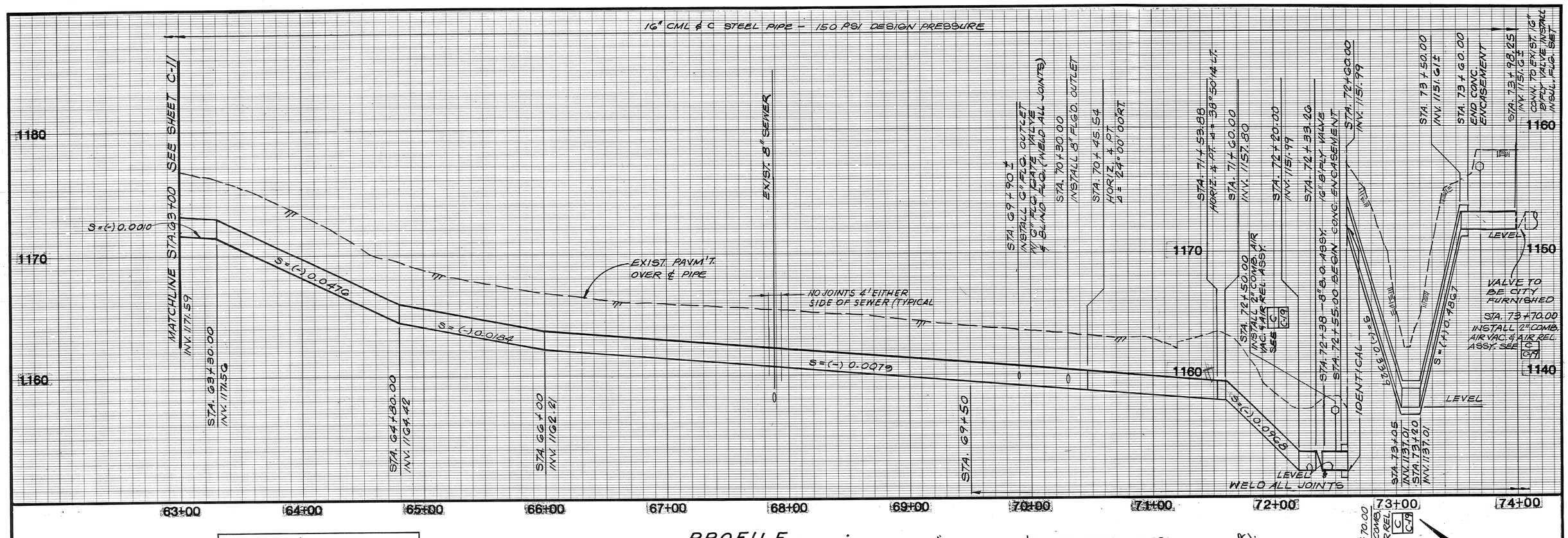

PROFILE

UNDERGROUND SERVICE ALERT
1-800-422-4133
CALL USA/SC
FOR UNDERGROUND LOCATING
2 WORKING DAYS BEFORE YOU DIG.

CONTRACTOR TO DETERMINE LOCATION OF TRAFFIC SIGNAL CONDUITS AND LOOPS PRIOR TO EXCAVATION. ANY DAMAGE TO EXISTING SYSTEM SHALL BE REPAIRED PER OWNER'S REQUIREMENTS AT THE CONTRACTOR'S EXPENSE.

CONTRACTOR TO FIELD VERIFY LOCATION OF ALL EXISTING FIRE HYDRANTS PRIOR TO FABRICATION OF 6-INCH FLANGED OUTLETS.

Note:
Contractor to protect existing curb & gutter in place, or repair in kind per city standard at contractor's expense.

CONTRACTOR TO PROVIDE TEMPORARY DIVERSION OF EXIST. STORM FLOW AROUND CONSTRUCTION AREA. MAX. FLOW = 550 CFS

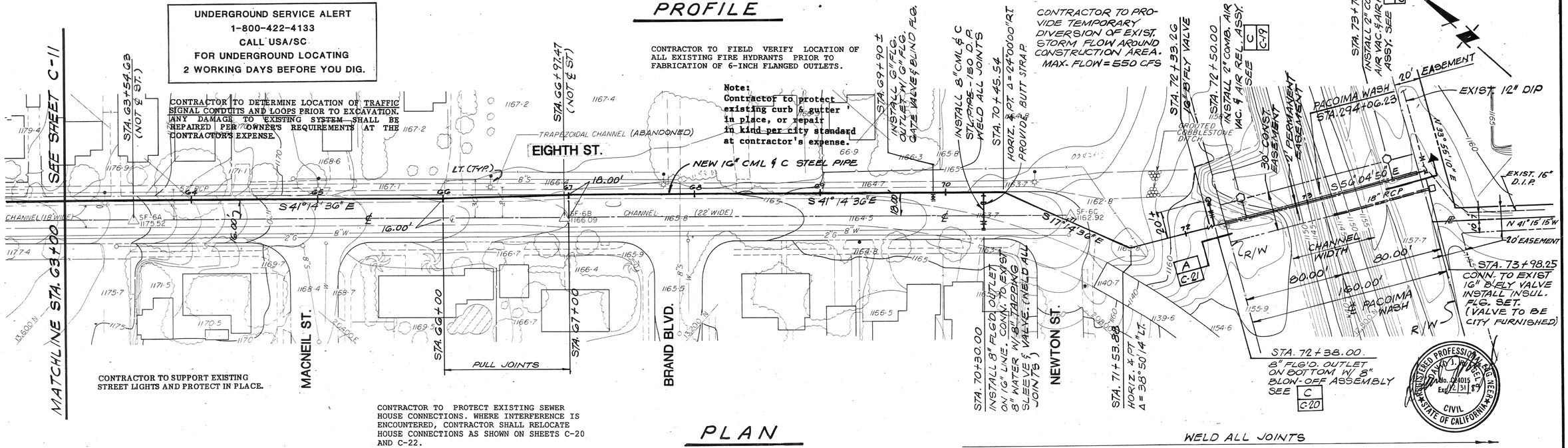

CONTRACTOR TO SUPPORT EXISTING STREET LIGHTS AND PROTECT IN PLACE.

CONTRACTOR TO PROTECT EXISTING SEWER HOUSE CONNECTIONS. WHERE INTERFERENCE IS ENCOUNTERED, CONTRACTOR SHALL RELOCATE HOUSE CONNECTIONS AS SHOWN ON SHEETS C-20 AND C-22.

PLAN

REGISTERED PROFESSIONAL ENGINEER — JAMES M. MONTGOMERY — No. C24015 — Exp. 12/31/89 — CIVIL — STATE OF CALIFORNIA

REV	DATE	BY	DESCRIPTION

SCALE: V: 1" = 4' H: 1" = 40'

DESIGNED J. Kemp
DRAWN V. Vasallo
CHECKED

SUBMITTED David Weigel — PROJECT ENGINEER — C24015 R.C.E. NO. — 4/27/88 DATE
RECOMMENDED Richard B. Rings — JAMES M. MONTGOMERY CONSULTING ENGINEERS, INC. — 24456 R.C.E. NO. — 4/27/88 DATE

JAMES M. MONTGOMERY CONSULTING ENGINEERS, INC.
P.O. BOX 7009, 250 N. MADISON AVE., PASADENA, CA 91109-7009

APPROVED Joseph R. Lopez RCE 18642 — City Engineer — 5/18/88 DATE
APPROVED — DATE

CITY OF SAN FERNANDO
WATER FACILITIES FOR ASSESSMENT DISTRICT NO. D-272
PLAN AND PROFILE
EIGHTH ST. TO PACOIMA WASH - STA. 63+00.00 TO STA. 73+98.25

SHEET C-12 OF 52 SHEETS

WESTERN AERIAL SURVEYS
RIVERSIDE VENTURA

JOB NO. ____ FILE ____ CC ____

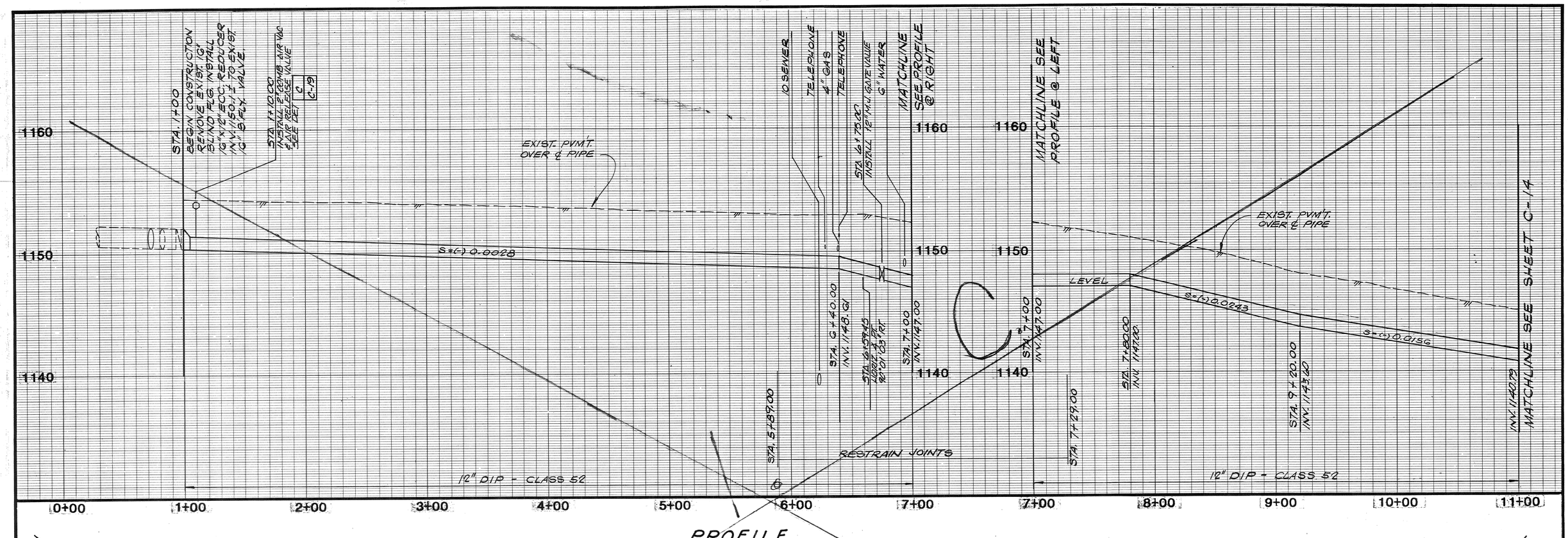

PROFILE

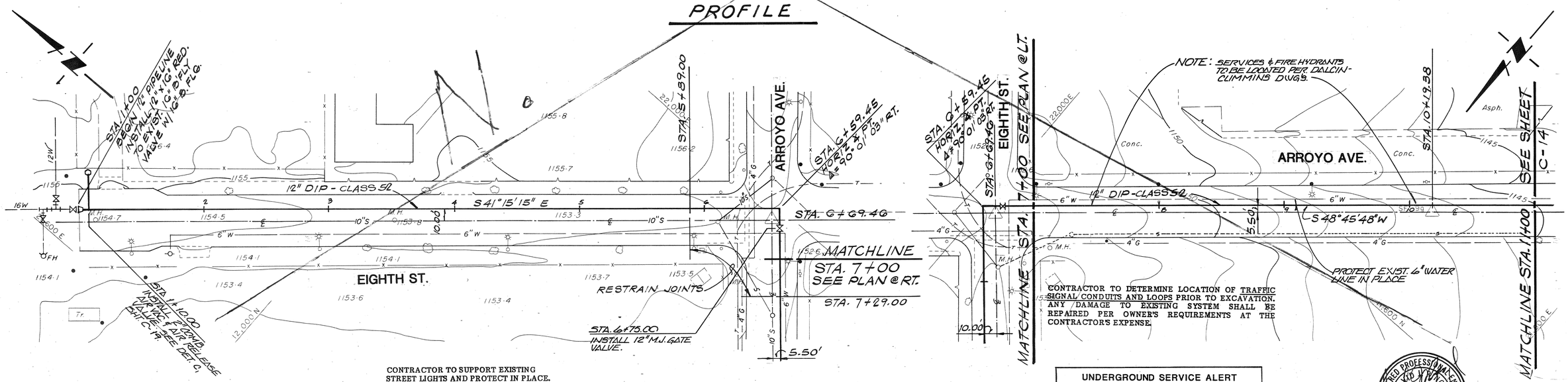

CONTRACTOR TO DETERMINE LOCATION OF TRAFFIC SIGNAL CONDUITS AND LOOPS PRIOR TO EXCAVATION. ANY DAMAGE TO EXISTING SYSTEM SHALL BE REPAIRED PER OWNER'S REQUIREMENTS AT THE CONTRACTOR'S EXPENSE.

CONTRACTOR TO SUPPORT EXISTING STREET LIGHTS AND PROTECT IN PLACE.

CONTRACTOR TO PROTECT EXISTING SEWER HOUSE CONNECTIONS. WHERE INTERFERENCE IS ENCOUNTERED, CONTRACTOR SHALL RELOCATE HOUSE CONNECTIONS AS SHOWN ON SHEETS C-20 AND C-22.

UNDERGROUND SERVICE ALERT
1-800-422-4133
CALL USA/SC
FOR UNDERGROUND LOCATING
2 WORKING DAYS BEFORE YOU DIG.

REGISTERED PROFESSIONAL ENGINEER
DAVID L. KINGEL
No. C24015
Exp. 12/31/89
CIVIL
STATE OF CALIFORNIA

PLAN

REV	DATE	BY	DESCRIPTION

SCALE: V: 1"=4' H: 1'=40'

DESIGNED [signature]
DRAWN V. Vasallo
CHECKED [signature]

SUBMITTED [signature] PROJECT ENGINEER — C24015 R.C.E. NO. — 4/27/88 DATE
RECOMMENDED [signature] JAMES M. MONTGOMERY CONSULTING ENGINEERS, INC. — 24656 R.C.E. NO. — 4/27/88 DATE

JAMES M. MONTGOMERY CONSULTING ENGINEERS, INC.
P.O. BOX 7009, 250 N. MADISON AVE., PASADENA, CA 91109-7009

APPROVED [signature] RCE 18642 City Engineer — 5/18/88 DATE
APPROVED — DATE

CITY OF SAN FERNANDO
WATER FACILITIES FOR ASSESSMENT DISTRICT NO. D-272
PLAN AND PROFILE
EIGHTH ST. TO ARROYO AVE. - STA. 1+00 TO STA. 11+00

SHEET C-13 OF 52 SHEETS

WESTERN AERIAL SURVEYS
RIVERSIDE VENTURA

JOB NO. FILE CC

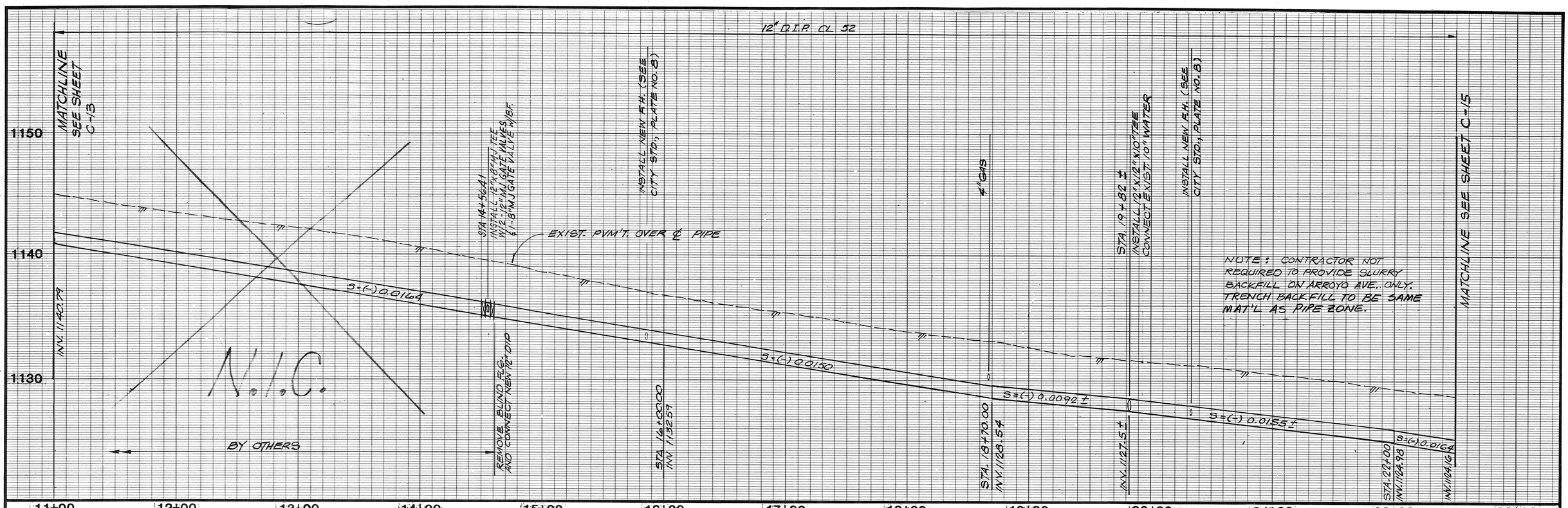

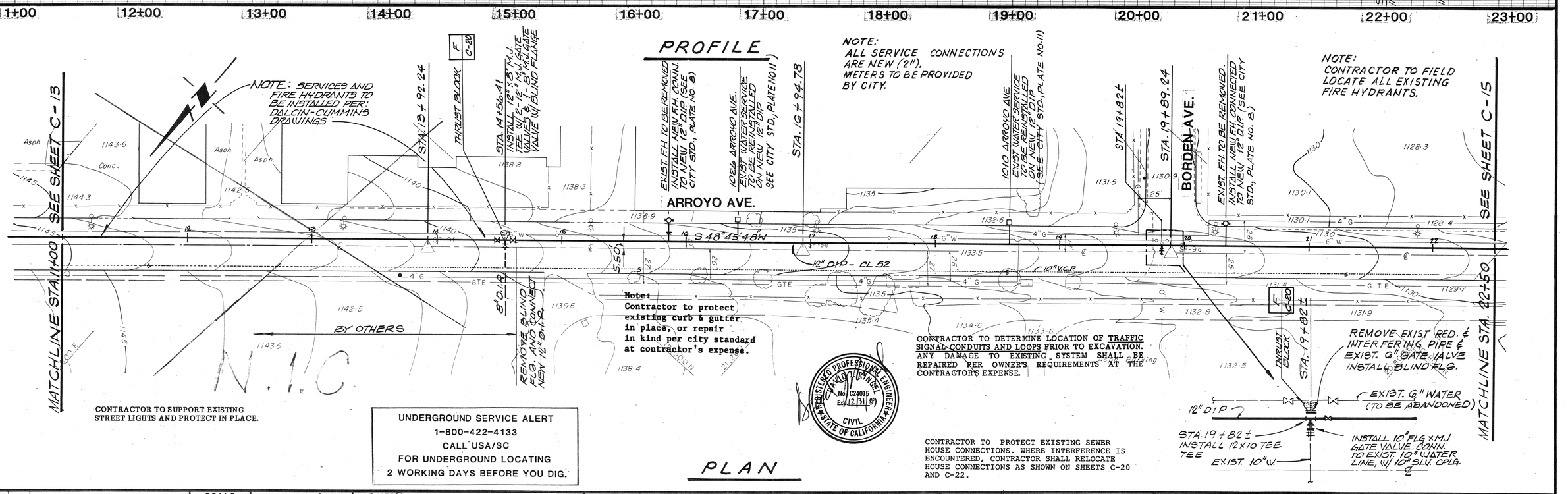

REV	DATE	BY	DESCRIPTION

SCALE: V: 1"=4' H: 1"=40'

DESIGNED J. Montgomery
DRAWN V. Vasallo
CHECKED R. Lee

SUBMITTED: PROJECT ENGINEER — C24015 R.C.E. NO. — 4/27/88 DATE

RECOMMENDED: JAMES M. MONTGOMERY CONSULTING ENGINEERS, INC. — 28656 R.C.E. NO. — 4/27/88 DATE

JAMES M. MONTGOMERY CONSULTING ENGINEERS, INC.

P.O. BOX 7009, 250 N. MADISON AVE., PASADENA, CA 91109-7009

APPROVED: Joseph R. Brady RCE 18642, City Engineer — 5/18/88 DATE

APPROVED — DATE

CITY OF SAN FERNANDO

WATER FACILITIES FOR ASSESSMENT DISTRICT NO. D-272

PLAN AND PROFILE

ARROYO AVE. STA. 11 + 00 TO STA. 22 + 50

SHEET C-14 OF 52 SHEETS

WESTERN AERIAL SURVEYS
RIVERSIDE VENTURA

JOB NO. FILE CC

12" DIP - CLASS 52

MATCHLINE STA. 22+50 SEE SHEET C-14

INV. 1128.10

1130

1120

1110

EXIST. PVM'T. OVER ℄ PIPE

S = (-) 0.0164

NOTE: CONTRACTOR NOT REQUIRED TO PROVIDE SLURRY BACKFILL ON ARROYO AVE. ONLY. BACKFILL TO BE SAME MAT'L AS USED IN PIPE ZONE.

RESTRAIN ALL JOINTS

STA. 28+50.00

STA. 29+00.36 INSTALL 45° ELL HORIZ. & PT.

STA. 29+10.00 INSTALL 45° ELL HORIZ. & PT.

STA. 29+40± REMOVE EXIST. 12"x6" RED. CONN. TO EXIST. 12" GATE VALVE (VERIFY LOCATION IN FIELD) INV. 1118.84±

STA. 29+00.00 INSTALL 6" BLOW-OFF ASSY. C-19 (B)

EXIST. 12" DIP

22+00 23+00 24+00 25+00 26+00 27+00 28+00 29+00 30+00

PROFILE

Note: Contractor to protect existing curb & gutter in place, or repair in kind per city standard at contractor's expense.

SEE SHEET C-14

EXIST. FH. TO BE REMOVED INSTALL NEW FH. CONNECTED TO NEW 12" D.I.P. (SEE CITY STD. PLATE NO. 8)

STA. 23+75.66

PROTECT EXIST. 6" W.L. IN PLACE UNTIL ALL SERVICES & F.H.'S ARE RELOCATED TO NEW MAIN & ARE IN SERVICE

SF-9c 1126.53

STA. 24+50.00

STA. 25+89.72

STA. 26+06.39

EXIST. FH. TO BE REMOVED INSTALL NEW F.H. CONN. TO NEW 12" D.I.P. (SEE CITY STD. PLATE NO. 8)

STA. 26+89.72

BLDO ARROYO AVE EXIST. WATER SERVICE TO BE REINSTALLED ON NEW 12" D.I.P. (SEE CITY STD. PLATE NO. 10)

BLDO ARROYO AVE EXIST. WATER SERVICE TO BE REINSTALLED ON NEW 12" D.I.P. (SEE CITY STD. PLATE NO. 10)

CUT & PLUG EXIST. 6" WATER & ABADON IN PLACE.

ARROYO AVE.

S 48°45'48"W

12" DIP-CLASS 52

S 10° VCP

GTE

MH.

SF-9a 1116.52

SF-9 1111.64

6" W

12" W

4" G

CONTRACTOR TO PROTECT EXISTING SEWER HOUSE CONNECTIONS. WHERE INTERFERENCE IS ENCOUNTERED, CONTRACTOR SHALL RELOCATE HOUSE CONNECTIONS AS SHOWN ON SHEETS C-20 AND C-22.

CONTRACTOR TO SUPPORT EXISTING STREET LIGHTS AND PROTECT IN PLACE.

CONTRACTOR TO DETERMINE LOCATION OF TRAFFIC SIGNAL CONDUITS AND LOOPS PRIOR TO EXCAVATION. ANY DAMAGE TO EXISTING SYSTEM SHALL BE REPAIRED PER OWNER'S REQUIREMENTS AT THE CONTRACTORS EXPENSE.

NOTES:
1. CONTRACTOR TO FIELD LOCATE ALL EXISTING FIRE HYDRANTS.
2. ALL SERVICE CONNECTIONS ARE NEW (2"). METERS TO BE PROVIDED BY CITY.

GLENCREST DR.

GLENOAKS BLVD.

EXIST. 12" DIP

NOTE: CONTRACTOR TO PROVIDE TEMPORARY BULKHEAD FOR TESTING AND DISINFECTION.

10,400 N

10,000 N

20,000 E

UNDERGROUND SERVICE ALERT
1-800-422-4133
CALL USA/SC
FOR UNDERGROUND LOCATING
2 WORKING DAYS BEFORE YOU DIG.

PLAN

REGISTERED PROFESSIONAL ENGINEER — No. 024015 Exp. 12/31/89 — CIVIL — STATE OF CALIFORNIA

REV	DATE	BY	DESCRIPTION

SCALE: V: 1" = 4' H: 1" = 40'

DESIGNED J. Kemp
DRAWN V. Vasallo
CHECKED J. Kemp

SUBMITTED Arsen Gharabegian, PROJECT ENGINEER — 024015 R.C.E. NO. — 4/27/88 DATE

RECOMMENDED Joseph D. Kemp, JAMES M. MONTGOMERY CONSULTING ENGINEERS, INC. — 21638 R.C.E. NO. — 4/27/88 DATE

JAMES M. MONTGOMERY CONSULTING ENGINEERS, INC.
P.O. BOX 7009, 250 N. MADISON AVE., PASADENA, CA 91109-7009

APPROVED Joseph D. Kemp RCE 18642, City Engineer — 5/18/88 DATE

APPROVED _____ DATE

CITY OF SAN FERNANDO
WATER FACILITIES FOR ASSESSMENT DISTRICT NO. D-272
PLAN AND PROFILE
ARROYO AVE. – STA. 22 + 50 TO STA. 29 + 40±

SHEET C-15 OF 52 SHEETS

WESTERN AERIAL SURVEYS
RIVERSIDE VENTURA

JOB NO. FILE CC

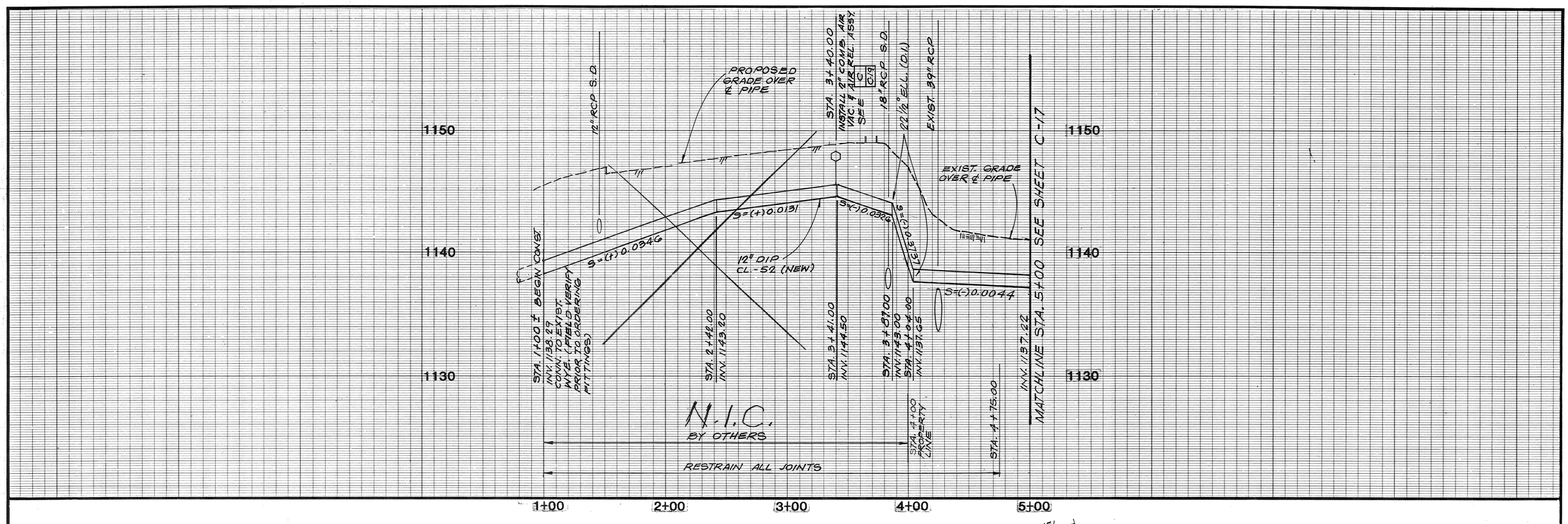

NOTE:
CONTOURS AS SHOWN ON PLAN ARE NOT UP TO DATE W/ EXIST. CONDITIONS, SEE GRADE AT PROFILE.

Note:
Contractor to protect existing curb & gutter in place, or repair in kind per city standard at contractor's expense.

UNDERGROUND SERVICE ALERT
1-800-422-4133
CALL USA/SC
FOR UNDERGROUND LOCATING
2 WORKING DAYS BEFORE YOU DIG.

REGISTERED PROFESSIONAL ENGINEER DAVID J. RANGEL No. C24015 Exp. 12/31/89 CIVIL STATE OF CALIFORNIA

REV	DATE	BY	DESCRIPTION

SCALE: V: 1" = 4' H: 1" = 40'

DESIGNED [signature]
DRAWN V. Vasallo
CHECKED [signature]

SUBMITTED [signature] PROJECT ENGINEER — C24015 R.C.E. NO. — 4/27/88 DATE
RECOMMENDED [signature] JAMES M. MONTGOMERY CONSULTING ENGINEERS, INC. — 24656 R.C.E. NO. — 4/27/88 DATE

JAMES M. MONTGOMERY CONSULTING ENGINEERS, INC.
P.O. BOX 7009, 250 N. MADISON AVE., PASADENA, CA 91109-7009

APPROVED [signature] Joseph R. Lopez RCE 18642 City Engineer — 5/18/88 DATE
APPROVED _____ DATE

CITY OF SAN FERNANDO
WATER FACILITIES FOR ASSESSMENT DISTRICT D-272
PLAN AND PROFILE
PACOIMA WASH - STA. 1+00 TO STA. 5+00

SHEET C-16 OF 52 SHEETS

WESTERN AERIAL SURVEYS
RIVERSIDE VENTURA

JOB NO. ____ FILE ____ CC

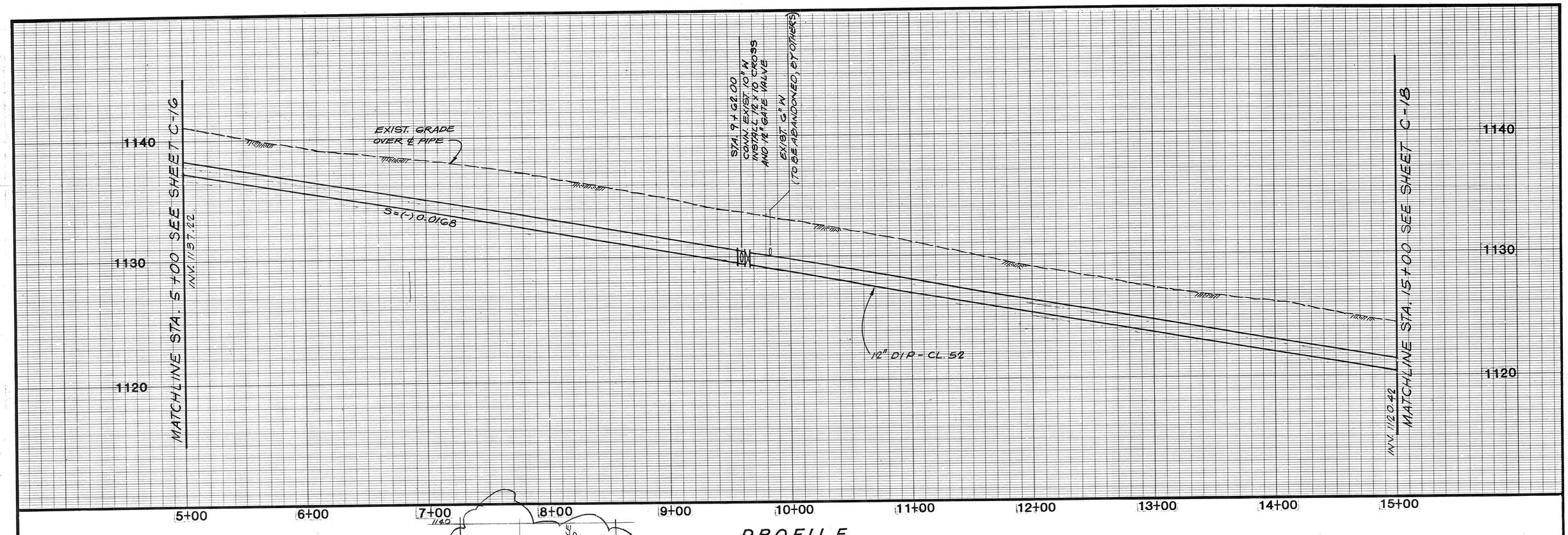

PROFILE

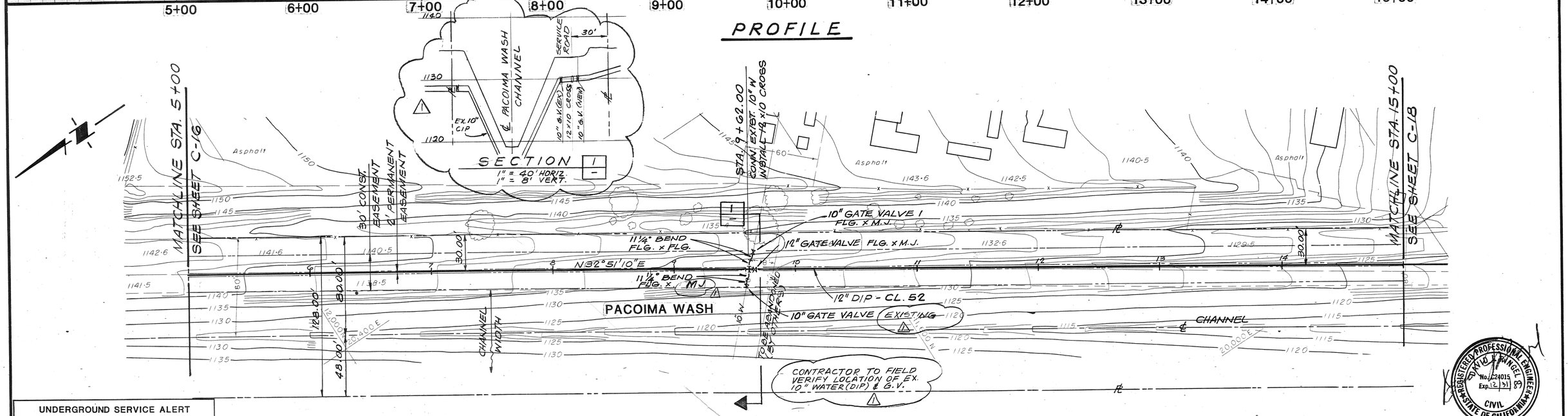

PLAN

UNDERGROUND SERVICE ALERT
1-800-422-4133
CALL USA/SC
FOR UNDERGROUND LOCATING
2 WORKING DAYS BEFORE YOU DIG.

REV	DATE	BY	DESCRIPTION
1	6-2-88	A.V.	ADDED SECT. 1 - ADDENDUM NO. 1

SCALE: V: 1" = 4' H: 1" = 40'

DESIGNED [signature]
DRAWN V. Vasallo
CHECKED [signature]

SUBMITTED [signature] PROJECT ENGINEER — C24015 R.C.E. NO. — 4/27/88 DATE
RECOMMENDED [signature] JAMES M. MONTGOMERY CONSULTING ENGINEERS, INC. — 24656 R.C.E. NO. — 4/27/88 DATE

JAMES M. MONTGOMERY CONSULTING ENGINEERS, INC.
P.O. BOX 7009, 250 N. MADISON AVE., PASADENA, CA 91109-7009

APPROVED [signature] Joseph D. Lopez RCE18642 City Engineer — 5/18/88 DATE
APPROVED _____ DATE

CITY OF SAN FERNANDO
WATER FACILITIES FOR ASSESSMENT DISTRICT NO. D-272
PLAN AND PROFILE
PACOIMA WASH - STA. 5 + 00 TO STA. 15 + 00

SHEET C-17 OF 52 SHEETS

REGISTERED PROFESSIONAL ENGINEER DAVID J. RINGEL No. C24015 Exp. 12/31/89 CIVIL STATE OF CALIFORNIA

WESTERN AERIAL SURVEYS
RIVERSIDE VENTURA

JOB NO. _____ FILE _____ CC

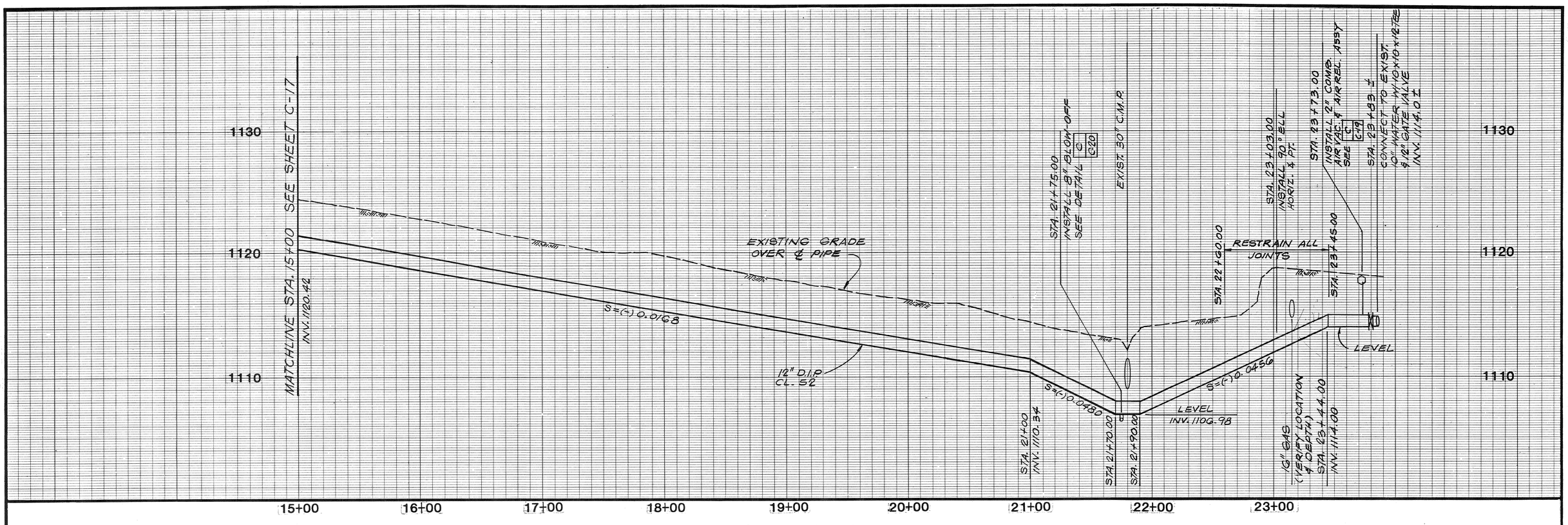

PROFILE

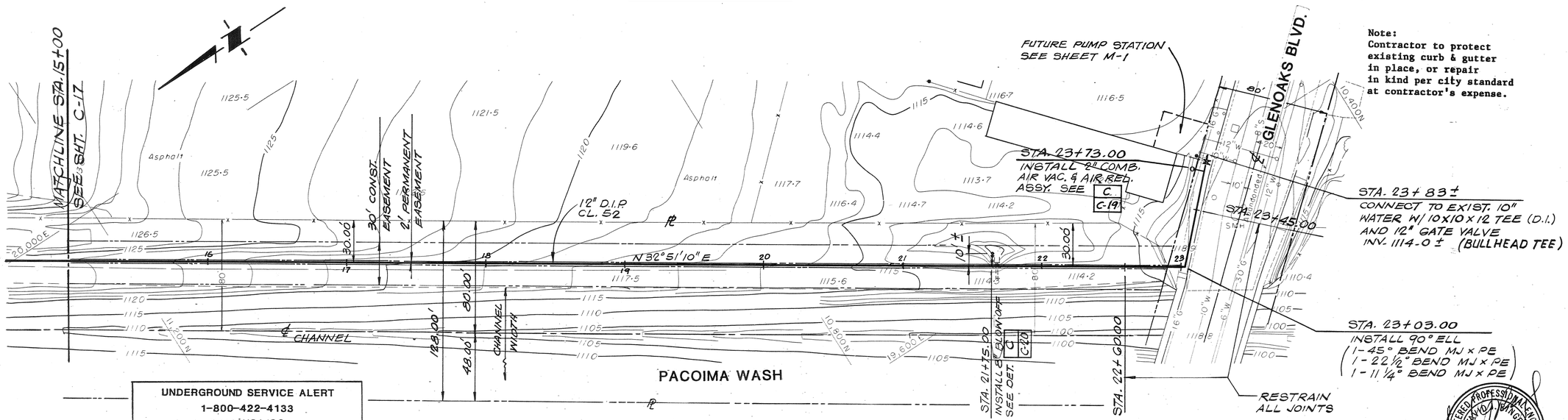

Note:
Contractor to protect existing curb & gutter in place, or repair in kind per city standard at contractor's expense.

UNDERGROUND SERVICE ALERT
1-800-422-4133
CALL USA/SC
FOR UNDERGROUND LOCATING
2 WORKING DAYS BEFORE YOU DIG.

CONTRACTOR TO PROTECT EXISTING SEWER HOUSE CONNECTIONS. WHERE INTERFERENCE IS ENCOUNTERED, CONTRACTOR SHALL RELOCATE HOUSE CONNECTIONS AS SHOWN ON SHEETS C-20 AND C-22.

REGISTERED PROFESSIONAL ENGINEER — DAVID J. BINGEL — No. C24015 — Exp. 12/31/89 — CIVIL — STATE OF CALIFORNIA

PLAN

REV	DATE	BY	DESCRIPTION

SCALE: V: 1"=4' H: 1"=40'

DESIGNED [signature] DRAWN V. Vasallo CHECKED [signature]

SUBMITTED [signature] PROJECT ENGINEER — C24015 R.C.E. NO. — 4/27/88 DATE

RECOMMENDED [signature] JAMES M. MONTGOMERY CONSULTING ENGINEERS, INC. — 24656 R.C.E. NO. — 4/27/88 DATE

JAMES M. MONTGOMERY CONSULTING ENGINEERS, INC.
P.O. BOX 7009, 250 N. MADISON AVE., PASADENA, CA 91109-7009

APPROVED [signature] City Engineer — RCE 18642 — 5/18/88 DATE

APPROVED _____ DATE

CITY OF SAN FERNANDO
WATER FACILITIES FOR ASSESSMENT DISTRICT NO. D-272
PLAN AND PROFILE
PACOIMA WASH – STA. 15 + 00 TO STA. 23 + 83±

SHEET C-18 OF 52 SHEETS

WESTERN AERIAL SURVEYS
RIVERSIDE VENTURA

JOB NO. FILE CC

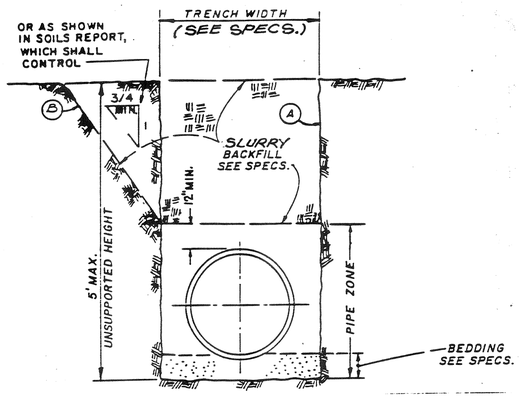

1. ALTERNATE TRENCH SECTIONS (A AND B) ARE FOR USE ONLY WHERE STABLE, COMPACT SOIL CONDITIONS EXIST. WHERE BOULDERS OR LARGE CONSTRUCTIONS ARE ENCOUNTERED, THE TRENCH SECTIONS MAY BE WIDER AND DEEPER THAN THAT SHOWN.
   - A. VERTICAL TRENCH WALLS-SECTION
     1. FOR DEPTH UP TO 5 FEET, NO TRENCH SUPPORT IS REQUIRED. IS REQUIRED.
     2. FOR DEPTH EXCEEDING 5 FEET, SHORING OR SOLID SHEATHING IS REQUIRED.
   - B. COMBINATION OF VERTICAL AND SLOPING TRENCH WALL-SECTION
     1. TRENCH DEPTH NOT EXCEEDING 5 FEET SHALL HAVE VERTICAL WALLS IN PIPE ZONE UNLESS OTHERWISE APPROVED, BY ENGINEER, OR WHERE SPECIFIED.
     2. FOR TRENCHES WITH COMBINED WALLS AND ANY DEPTH EXCEEDING 5 FEET, DESIGN CALCULATIONS BY A REGISTERED CIVIL ENGINEER AND APPROVAL BY GOVERNING AGENCY OF SUPPORTED METHODS ARE REQUIRED.
2. WHERE WET, UNSTABLE OR RUNNING SOIL IS ENCOUNTERED, SOLID SHEATHING IS REQUIRED FOR ALL VERTICAL TRENCH WALLS.

NOTE: TRENCH SECTION SHOWN DO NOT DESIGNATE PAY LINES.

TYPICAL TRENCH SECTION — 1 / —

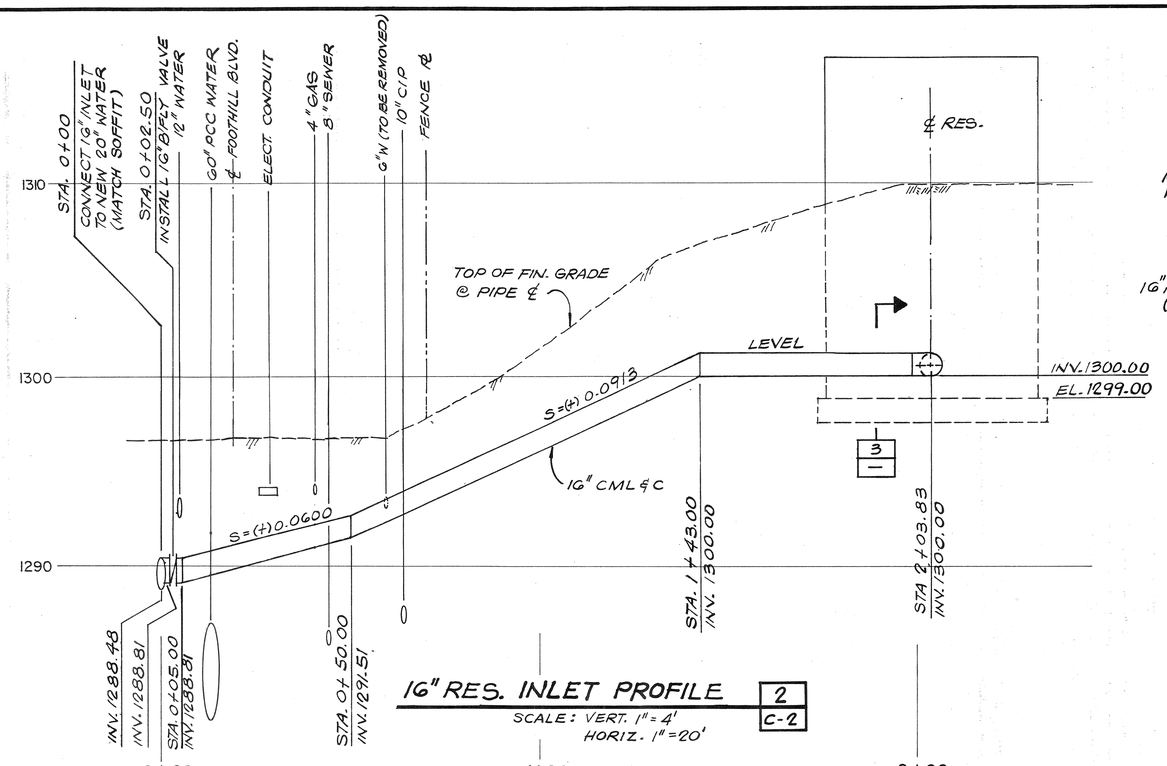

16" RES. INLET PROFILE — 2 / C-2

SCALE: VERT. 1" = 4'
HORIZ. 1" = 20'

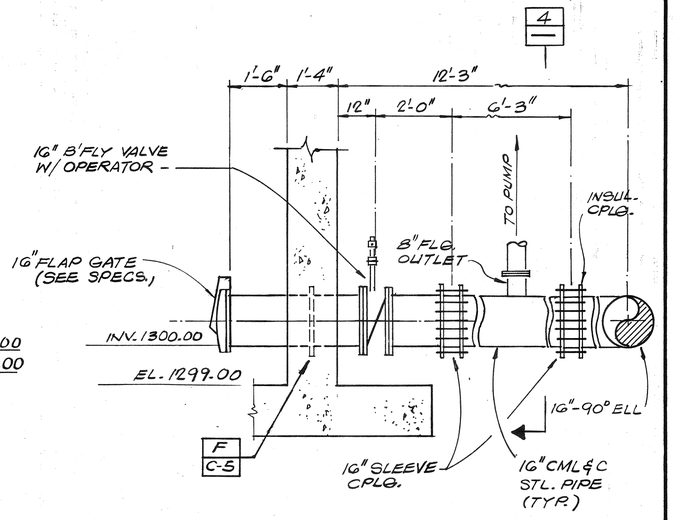

SECTION — 3 / C-1

SCALE: 1/2" = 1'-0"

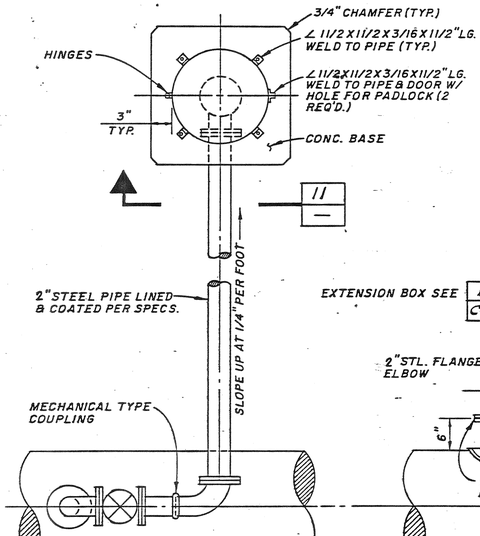

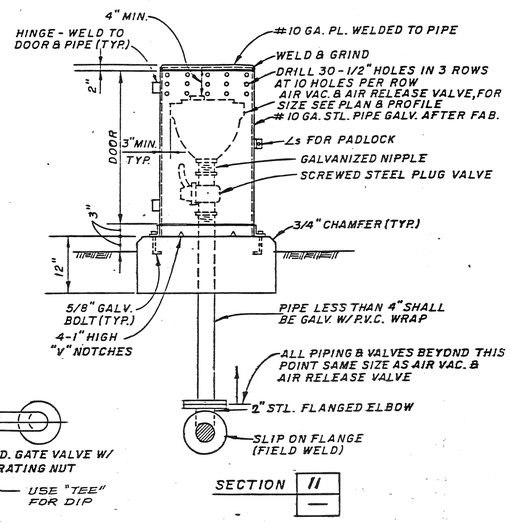

SECTION 11 / —

NOTES:
1. ALL FERROUS SURFACES OF PIPE AND APURTENANCES TO BE PROVIDED WITH PROTECTIVE COATINGS PER SPECS.
2. PROVIDE STAINLESS STEEL NUTS, BOLTS AND WASHERS TO BURIED FLANGES AND COUPLINGS, EXCEPT FOR NON METALLIC WASHERS TO BE PROVIDED AS PART OF INSULATING FLANGE SET
3. THIS ASSEMBLY TO BE USED IN AREAS WHERE VAULT NOT REQ'D. OR WHERE MAIN PIPELINE IS TOO SHALLOW TO PERMIT USE OF VAULT.

AIR VACUUM AND AIR RELEASE VALVE ASSEMBLY — C / C-6

NO SCALE

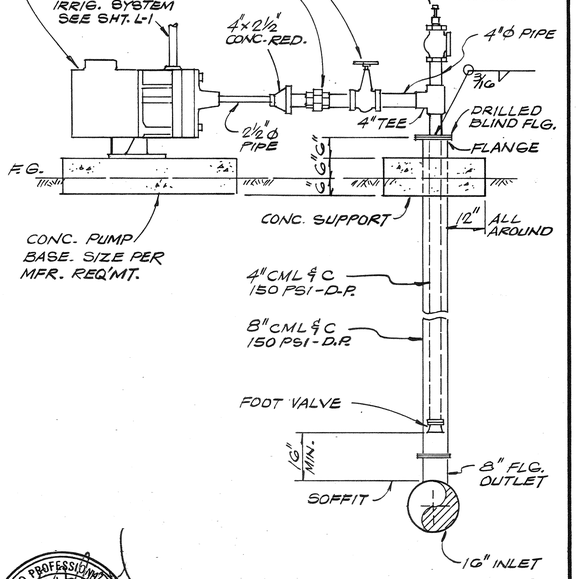

SECTION — 4 / —

SCALE: 1/2" = 1'-0"



TYPICAL BLOW-OFF DETAIL — B / C-6

NO SCALE

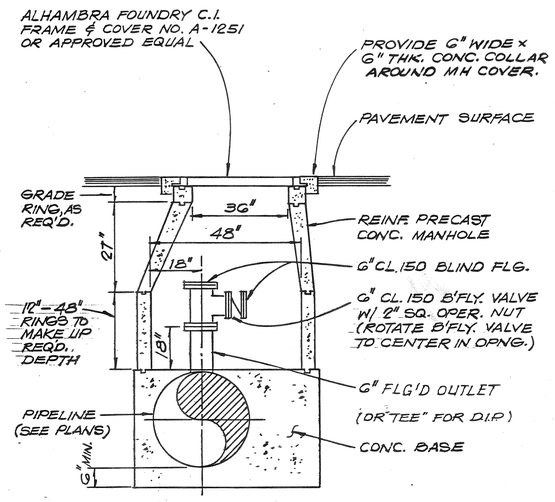

REV	DATE	BY	DESCRIPTION

SCALE:

DESIGNED
DRAWN V. Vasallo
CHECKED

SUBMITTED
PROJECT ENGINEER — C24015 R.C.E. NO. — 4/27/88 DATE

RECOMMENDED
JAMES M. MONTGOMERY of CONSULTING ENGINEERS, INC. — 24656 R.C.E. NO. — 4/27/88 DATE

JAMES M. MONTGOMERY CONSULTING ENGINEERS, INC.
P.O. BOX 7009, 250 N. MADISON AVE., PASADENA, CA 91109-7009

APPROVED Joseph R. Topa, RCE 18692, City Engineer — 5/18/88 DATE
APPROVED — DATE

CITY OF SAN FERNANDO
WATER FACILITIES FOR ASSESSMENT DISTRICT NO. D-272
MISCELLANEOUS DETAILS

SHEET C-19 OF 52 SHEETS

JOB NO. FILE CC

N38511

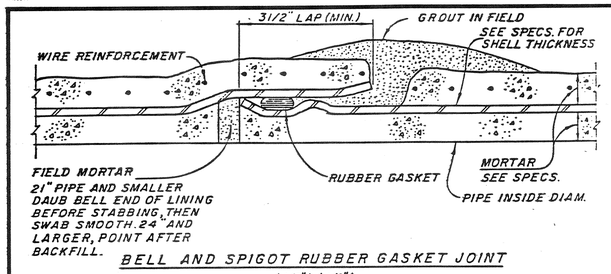

BELL AND SPIGOT RUBBER GASKET JOINT

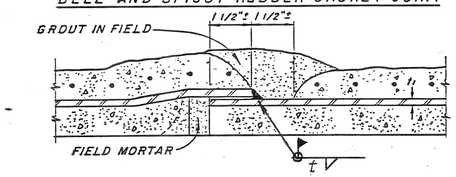

LAP WELDED SLIP JOINT

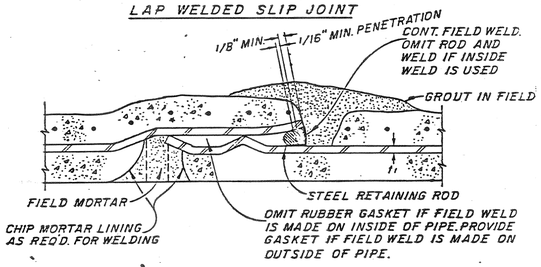

ALTERNATE FIELD WELDED JOINT

MORTAR LINED AND COATED STEEL PIPE

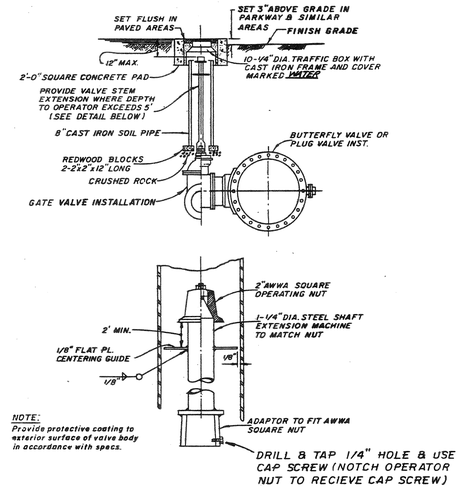

NOTE:
Provide protective coating to exterior surface of valve body in accordance with specs.

BURIED VALVE INSTALLATION B VAR.

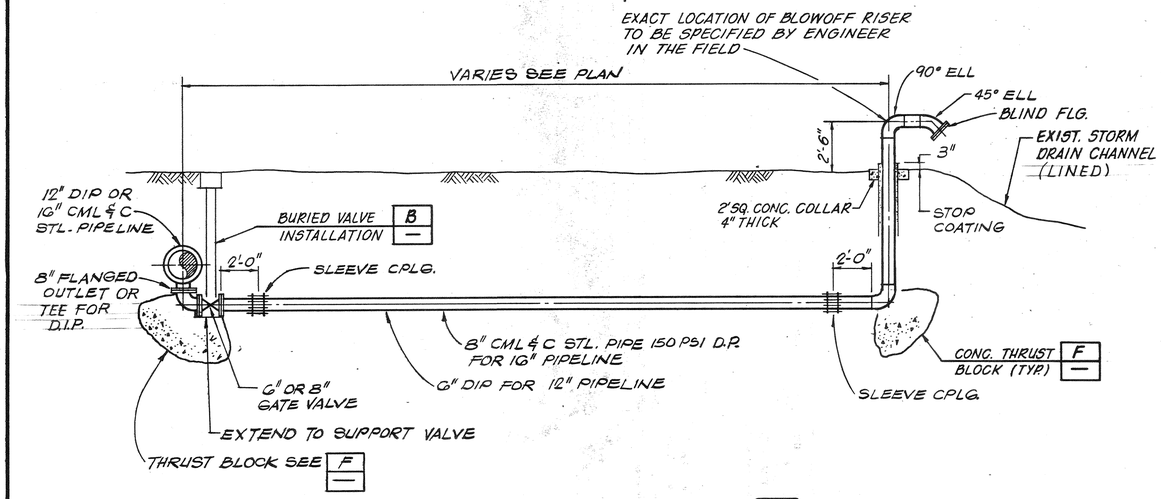

BLOWOFF ASSEMBLY DETAIL C VAR.

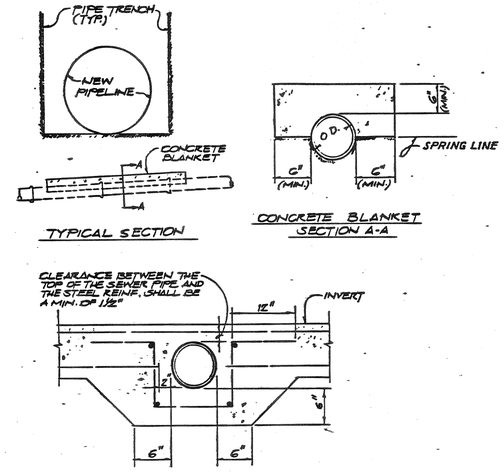

TYPICAL ENCASEMENT WHERE SEWER IS IN BASE AND APPROXIMATELY AT RIGHT ANGLES TO PIPELINE.

PROTECTION FOR EXISTING SEWERS

NO SCALE

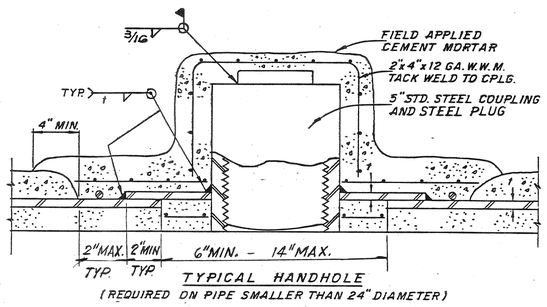

TYPICAL HANDHOLE

(REQUIRED ON PIPE SMALLER THAN 24" DIAMETER)

BUTT-STRAP JOINT FOR STEEL PIPE MORTAR LINED AND COATED, AND WELDED STEEL PIPE

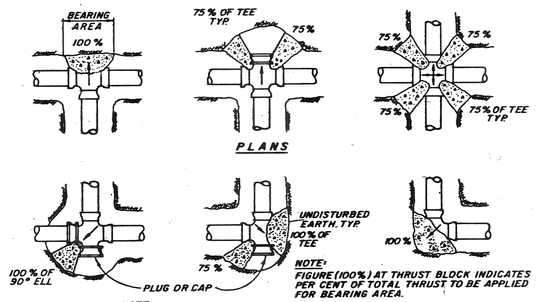

THRUST PER PSI OF WATER PRESSURE AT VARIOUS FITTINGS				
PIPE SIZE	DEAD END OR TEE	90° ELBOW	45° ELBOW	22-1/2° ELBOW
4	19	27	15	7
6	39	55	30	15
8	67	94	51	26
10	109	154	84	43
12	155	218	119	61
14	210	296	161	82
16	272	383	209	106
18	351	494	269	137
20	434	611	333	169
24	623	878	478	244

EXAMPLE:
8-INCH 90° ELBOW, PRESSURE = 200 lb./SQ. IN.
FROM TABLE: THRUST = 94 x 200 = 18,600 lb.
ASSUME BEARING STRENGTH OF SOIL = 2000 lb./SQ. FT.
18,800 / 2000 = 9.4 SQ. FT. = AREA OF BEARING REQUIRED. FOR THRUST BLOCK.

SIDE THRUST PER 100 lb./SQ. IN PRESSURE PER DEGREE OF DEFLECTION			
PIPE SIZE	SIDE THRUST-lb.	PIPE SIZE	SIDE THRUST-lb.
4	3.5	14	377
6	7.2	16	486
8	12.2	18	6.65
10	19.7	20	7.90
12	27.8	24	1150 "

MULTIPLY THRUST BY DEGREE OF DEFLECTION TO OBTAIN TOTAL THRUST

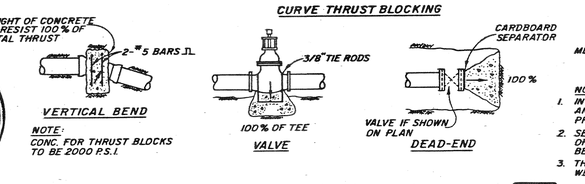

REGISTERED PROFESSIONAL ENGINEER — DAVID A. ANGEL — No. C24015 Exp. 12/31/89 — CIVIL — STATE OF CALIFORNIA

NOTES:
1. IN USING THE ABOVE TABLES, USE THE MAXIMUM INTERNAL PRESSURE ANTICIPATED (i.e. HYDROSTATIC TEST PRESSURE, POSSIBLE SURGE PRESSURE DUE TO PUMP SHUT-OFF, ETC. - 150 PSI.
2. SEE SOILS REPORT FOR BEARING STRENGTH OF SOIL. IN THE ABSENCE OF A SOILS REPORT, AN AVERAGE SOIL (SPADABLE MEDIUM CLAY) CAN BE ASSUMED TO HAVE A BEARING STRENGTH OF 2000 P.S.F.
3. THRUST BLOCKS ARE NOT REQUIRED ON PVC. PIPE WITH SOLVENT WELDED JOINTS.
4. COMPRESSIVE STRENGTH OF OF CONCRETE FOR THRUST BLOCKS TO BE 2000 PSI MIN.

CONCRETE THRUST BLOCKING FOR CAST IRON PIPE F VAR.

REV	DATE	BY	DESCRIPTION

SCALE: NONE

DESIGNED J. Kemp
DRAWN V. Vasallo
CHECKED [illegible]

SUBMITTED [signature] PROJECT ENGINEER — C24015 R.C.E. NO. — 4/27/88 DATE

RECOMMENDED [signature] JAMES M. MONTGOMERY CONSULTING ENGINEERS, INC. — 24636 R.C.E. NO. — 4/27/88 DATE

JAMES M. MONTGOMERY CONSULTING ENGINEERS, INC. JMM
P.O. BOX 7009, 250 N. MADISON AVE., PASADENA, CA 91109-7009

APPROVED [signature] CITY ENGINEER — R.C.E. 18642 — 5/18/88 DATE

RECOMMENDED BY _____ WATER DEPARTMENT — DATE

CITY OF SAN FERNANDO

WATER FACILITIES FOR ASSESSMENT DISTRICT NO. D-272

MISCELLANEOUS DETAILS

SHEET C-20 OF 52 SHEETS

FILE

JOB NO.

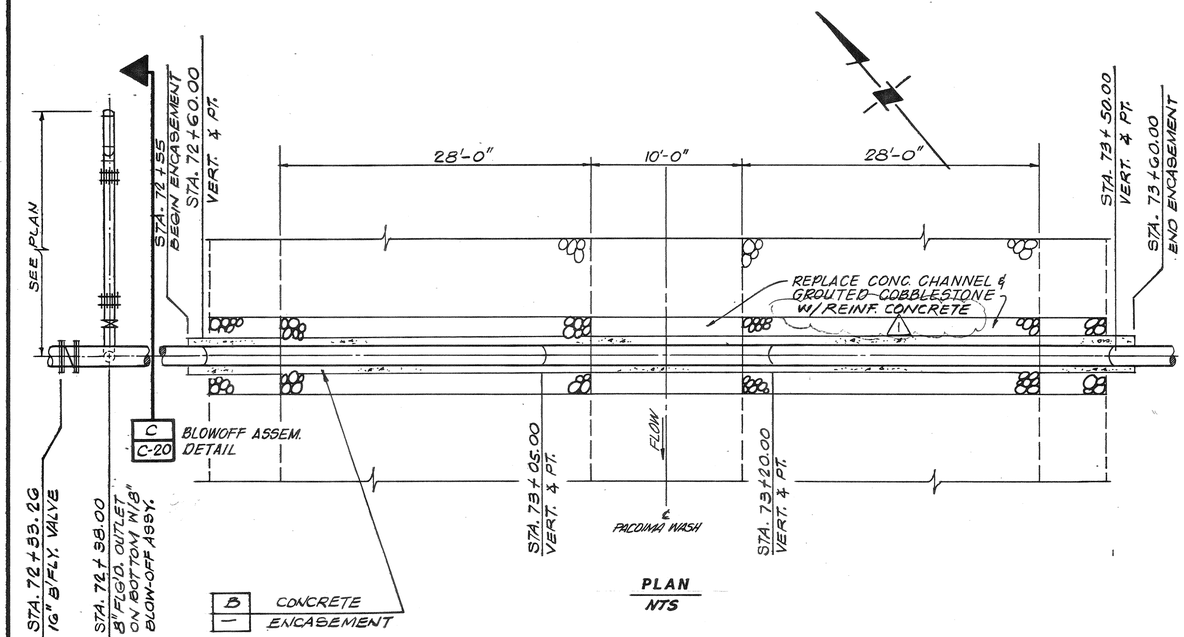

PLAN
NTS

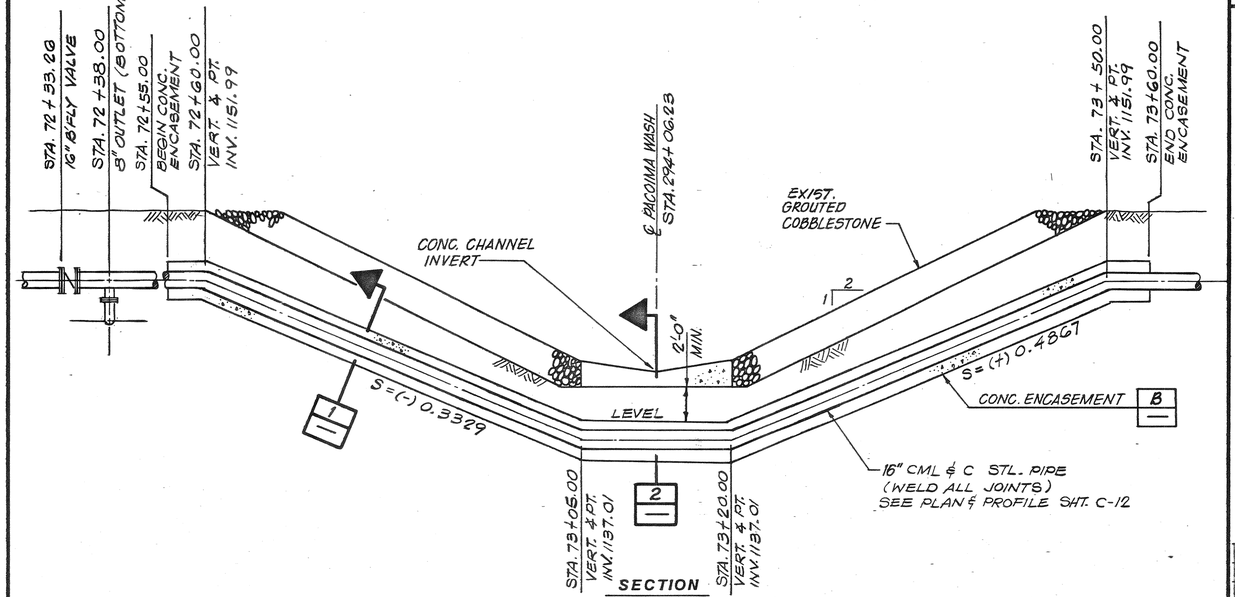

SECTION
NTS

PACOIMA WASH CROSSING A C-12

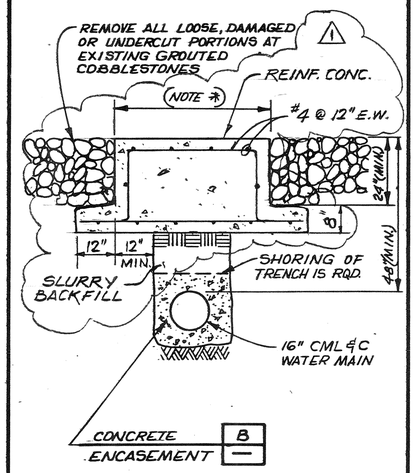

SECTION 1

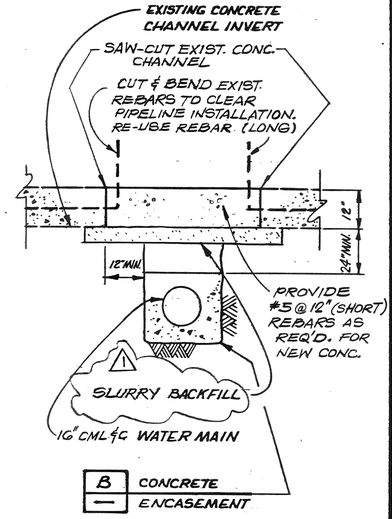

SECTION 2

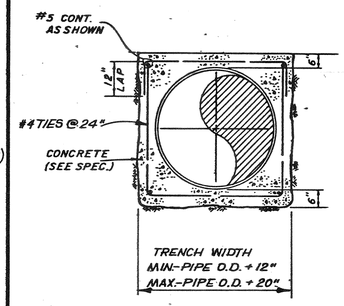

CONCRETE ENCASEMENT B

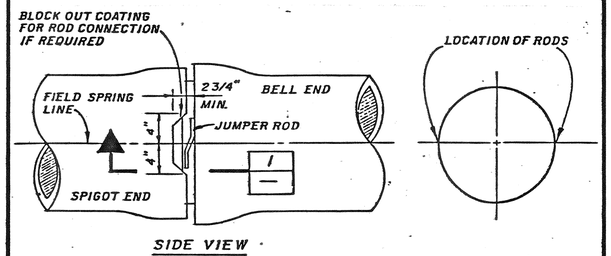

SIDE VIEW

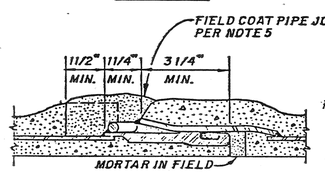

SECTION 1

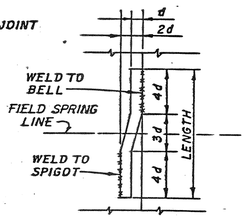

JUMPER ROD

ROD BONDING DETAIL

NOMINAL PIPE DIA. (INS.)	16	20
CYLINDER WALL THICKNESS (INS.)	0.1046	0.1046
JUMPER ROD DIA. (d)	1/4"	1/4"
JUMPER ROD LENGTH (INS.)	23/4"	23/4"
FLEXIBLE CABLE SIZE	—	—
NO. OF JUMPERS PER PIPE JOINT	1	1

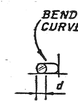

DETAILS FOR ELECTRICALLY BONDED STEEL PIPE C

GENERAL NOTES

1. THE CONTRACTOR SHALL NOTIFY THE CITY ENGINEER BY TELEPHONE, (818) 898-1223, AT LEAST 48 HOURS BEFORE STARTING ANY WORK UNDER THIS CONTRACT.
2. THE CONTRACTOR SHALL NOTIFY USA, UNDERGROUND SERVICE ALERT, (800) 422-4133 AT LEAST 48 HOURS BEFORE STARTING ANY WORK UNDER THIS CONTRACT.
3. THE LOCATIONS OF EXISTING UNDERGROUND UTILITIES ARE SHOWN IN AN APPROXIMATE WAY ONLY. THE CONTRACTOR SHALL DETERMINE THE EXACT LOCATION OF ALL EXISTING UTILITIES BY POT HOLING BEFORE COMMENCING WORK. HE AGREES TO BE FULLY RESPONSIBLE FOR ANY AND ALL DAMAGES WHICH MIGHT BE OCCASIONED BY HIS FAILURE TO EXACTLY LOCATE AND PRESERVE ANY AND ALL UNDERGROUND UTILITIES.
4. APPROVAL OF THIS PLAN BY THE CITY OF SAN FERNANDO DOES NOT CONSTITUTE A REPRESENTATION AS TO THE ACCURACY OF THE LOCATION OR EXISTENCE OR NON-EXISTENCE OF ANY UNDERGROUND UTILITY, PIPE, OR STRUTURE WITHIN LIMITS OF THIS PROJECT.
5. THE CONTRACTOR SHALL BE RESPONSIBLE TO PROTECT ALL EXISTING IMPROVEMENTS DURING CONSTRUCTION AND SHALL REPLACE OR RESTORE ANY IMPROVEMENTS DAMAGED AS A RESULT OF THE CONSTRUCTION ACTIVITY.
6. MIMIMUM COVER OVER ALL WATER MAINS SHALL BE 36", UNLESS SHOWN OR SPECIFIED OTHERWISE.
7. THRUST BLOCKS SHALL BE CONSTRUCTED AT ALL BENDS, TEES AND VALVES IN ACCORDANCE WITH DETAIL F C-20 UNLESS RESTRAINED PIPE JOINTS ARE SPECIFIED.

REGISTERED PROFESSIONAL ENGINEER — RAYMOND L. INGEL — No. C24015 Exp. 12-31-89 — CIVIL — STATE OF CALIFORNIA

REV	DATE	BY	DESCRIPTION
1	6-2-88	A.V	REV. SECTIONS 1, 2 — ADDENDUM NO.1

SCALE: NONE

DESIGNED
DRAWN V. Vasallo
CHECKED

SUBMITTED — PROJECT ENGINEER — C24015 R.C.E. NO. — 4/27/88 DATE

RECOMMENDED — JAMES M. MONTGOMERY CONSULTING ENGINEERS, INC. — 24656 R.C.E. NO. — 4/27/88 DATE

JAMES M. MONTGOMERY CONSULTING ENGINEERS, INC.
P.O. BOX 7009. 250 N. MADISON AVE., PASADENA, CA 91109-7009

APPROVED — CITY ENGINEER — RCE 18642 — 5/18/88 DATE

RECOMMENDED BY — WATER DEPARTMENT — DATE

CITY OF SAN FERNANDO
WATER FACILITIES FOR ASSESSMENT DISTRICT NO. D-272
MISCELLANEOUS DETAILS

SHEET C-21 OF 52 SHEETS

JOB NO. FILE

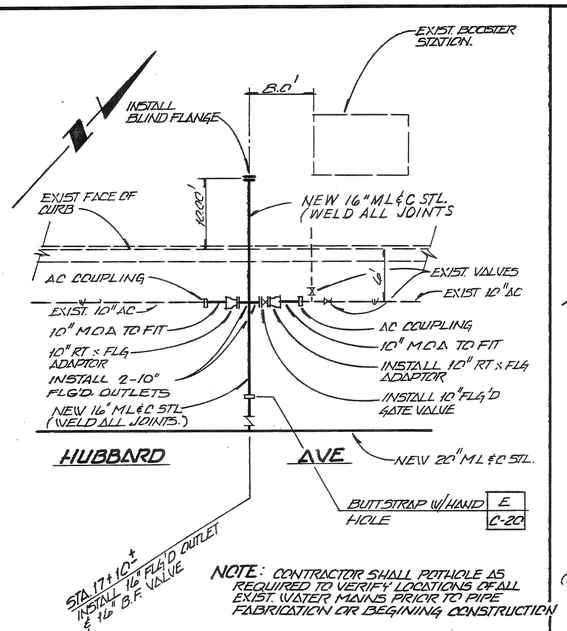

NOTE: CONTRACTOR SHALL POTHOLE AS REQUIRED TO VERIFY LOCATIONS OF ALL EXIST. WATER MAINS PRIOR TO PIPE FABRICATION OR BEGINING CONSTRUCTION

CONNECTION DETAIL 1 / C-7
NO SCALE

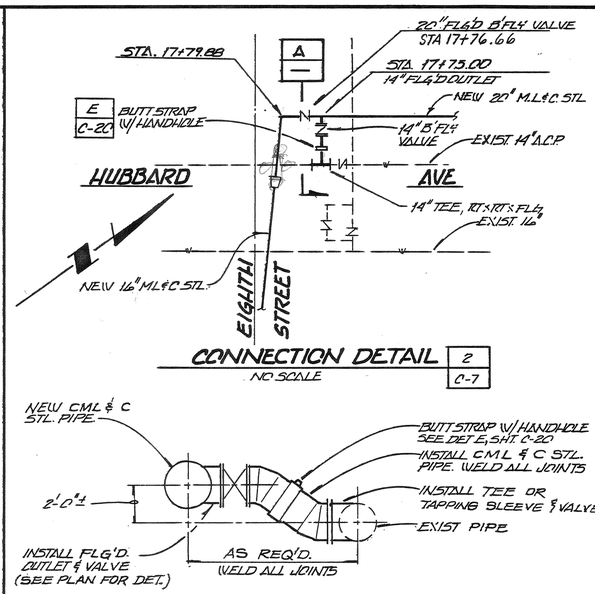

CONNECTION DETAIL 2 / C-7
NO SCALE

NOTE: CONTRACTOR SHALL POTHOLE AS REQUIRED TO VERIFY LOCATIONS OF ALL EXIST. WATER MAINS PRIOR TO PIPE FABRICATION OR BEGINING CONSTRUCTION.

SECTION A / —
NO SCALE

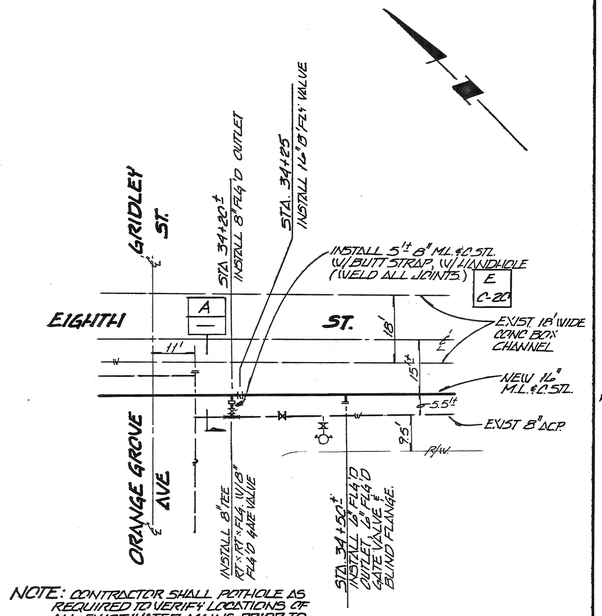

NOTE: CONTRACTOR SHALL POTHOLE AS REQUIRED TO VERIFY LOCATIONS OF ALL EXIST WATER MAINS PRIOR TO PIPE FABRICATION OR BEGINING CONSTRUCTION.

CONNECTION DETAIL 3 / C-9
NO SCALE

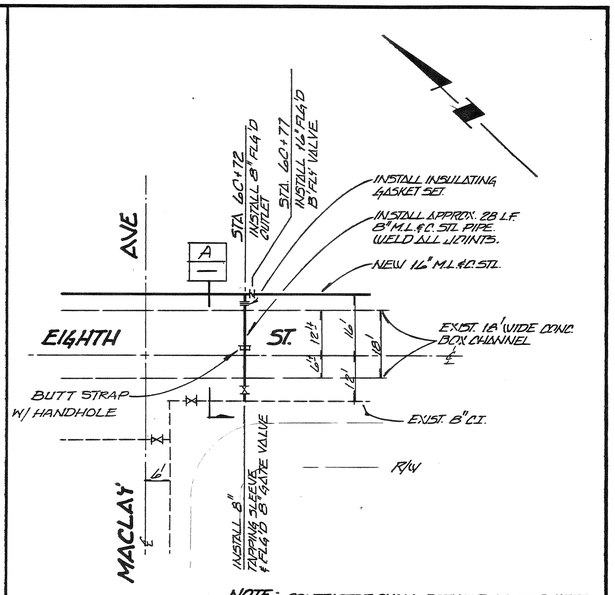

NOTE: CONTRACTOR SHALL POTHOLE AS REQUIRED TO VERIFY LOCATIONS OF ALL EXISTING WATER MAINS PRIOR TO PIPE FABRICATION OR BEGINING CONSTRUCTION.

CONNECTION DETAIL 4 / C-11
NO SCALE

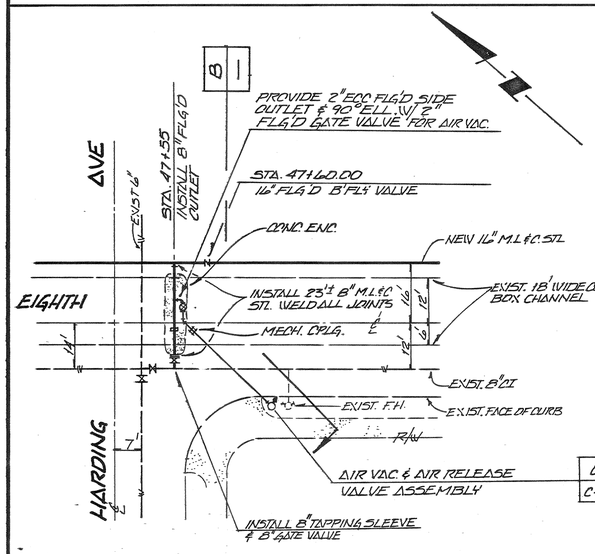

NOTE: CONTRACTOR SHALL POTHOLE AS REQUIRED TO VERIFY LOCATIONS OF ALL EXIST WATER MAINS PRIOR TO PIPE FABRICATION OR BEGINING CONSTRUCTION.

CONNECTION DETAIL 5 / C-10
NO SCALE

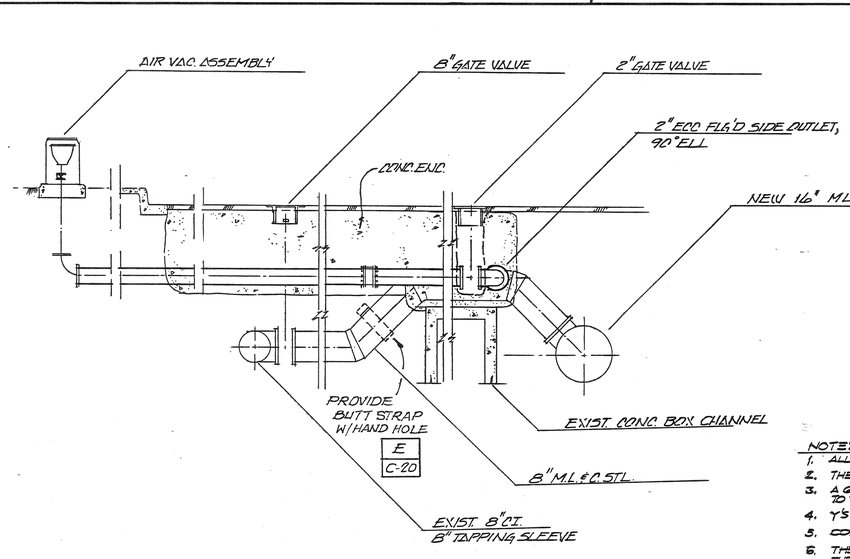

SECTION B / —
NO SCALE

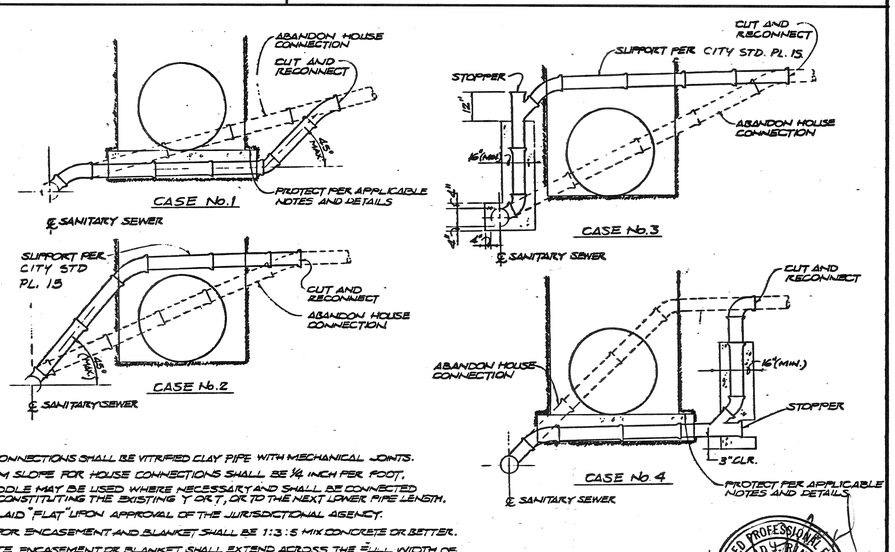

NOTES:
1. ALL HOUSE CONNECTIONS SHALL BE VITRIFIED CLAY PIPE WITH MECHANICAL JOINTS.
2. THE MINIMUM SLOPE FOR HOUSE CONNECTIONS SHALL BE ¼ INCH PER FOOT.
3. A 6 INCH SADDLE MAY BE USED WHERE NECESSARY AND SHALL BE CONNECTED TO THE PIPE CONSTITUTING THE EXISTING 'Y OR T', OR TO THE NEXT LOWER PIPE LENGTH.
4. Y'S MAY BE LAID "FLAT" UPON APPROVAL OF THE JURISDICTIONAL AGENCY.
5. CONCRETE FOR ENCASEMENT AND BLANKET SHALL BE 1:3:5 MIX CONCRETE OR BETTER.
6. THE CONCRETE ENCASEMENT OR BLANKET SHALL EXTEND ACROSS THE FULL WIDTH OF THE PIPELINE TRENCH PLUS AN ADDITIONAL 12 INCHES INTO UNDISTURBED EARTH ON EACH SIDE OF THE PIPELINE TRENCH.
7. WHEN THE CLEARANCE BETWEEN THE BOTTOM OF THE PIPELINE AND THE TOP OF THE SEWER IS BETWEEN 6 INCHES AND 18 INCHES THE SEWER SHALL BE ENCASED OR BLANKETED, AS THE CASE MAYBE, AS INDICATED HEREON.

SEWER HOUSE CONNECTION RELOCATION DETAILS
NO SCALE

REGISTERED PROFESSIONAL ENGINEER — DAVID W. RANGE — No. 028015 Exp. 12/31/89 — CIVIL — STATE OF CALIFORNIA

REV	DATE	BY	DESCRIPTION

SCALE: NO SCALE

DESIGNED
DRAWN C.L.
CHECKED

SUBMITTED — PROJECT ENGINEER — C29015 R.C.E. NO. — 4/27/88 DATE
RECOMMENDED — JAMES M. MONTGOMERY CONSULTING ENGINEERS, INC. — 24656 R.C.E. NO. — 4/27/88 DATE

JAMES M. MONTGOMERY CONSULTING ENGINEERS, INC.
250 North Madison Avenue, Post Office Box 7009, Pasadena, California 91109-7009

APPROVED — City Engineer, RCE 18692 — 5/18/88 DATE
APPROVED — DATE

CITY OF SAN FERNANDO
WATER FACILITIES FOR ASSESSMENT DISTRICT NO. D-272
MISCELLANEOUS DETAILS

SHEET C-22 OF 52 SHEETS

JOB NO. FILE CC

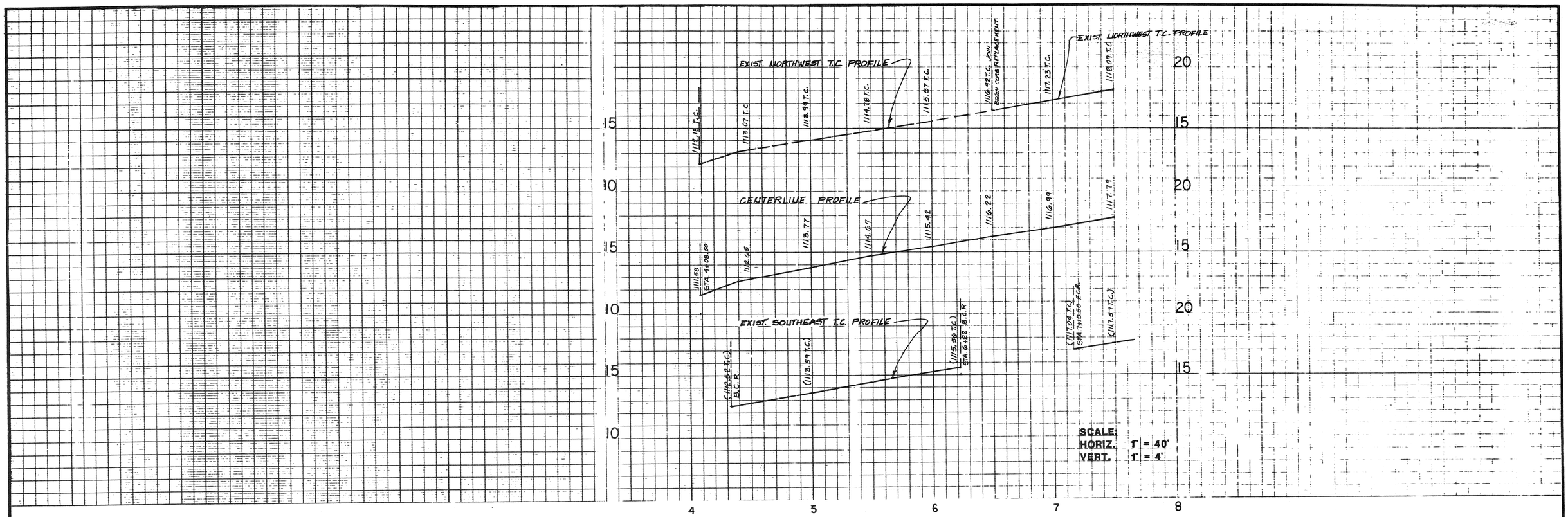

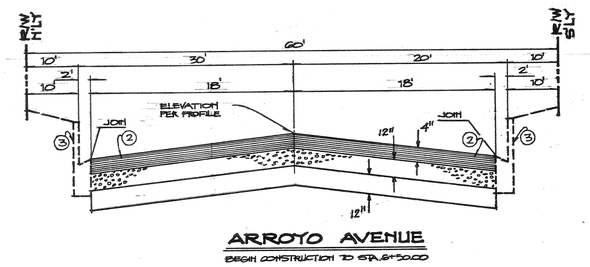

ARROYO AVENUE

BEGIN CONSTRUCTION TO STA. 6+50.00

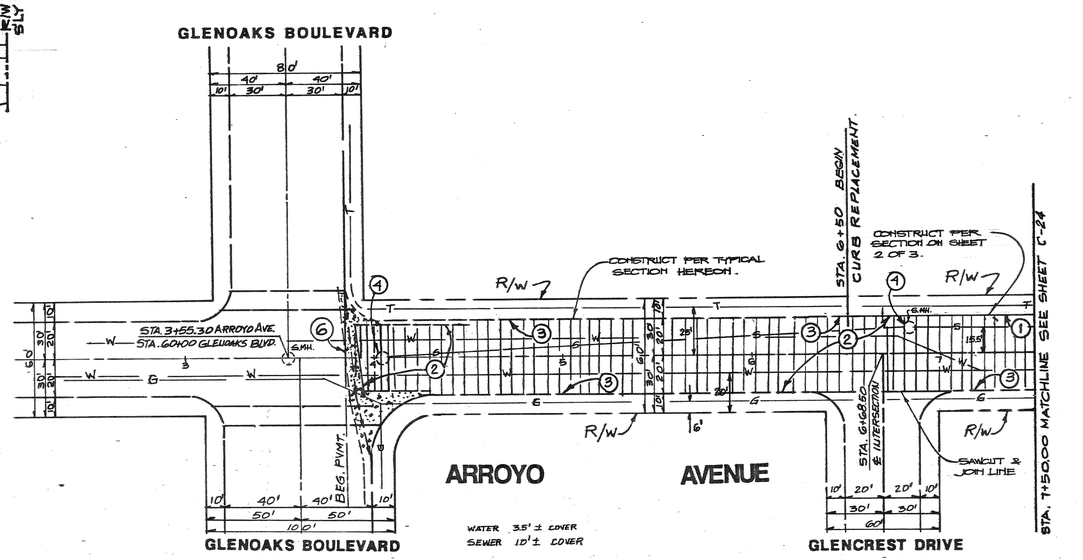

CONSTRUCTION NOTES

1. TYPE C INTEGRAL CURB AND GUTT. S 410-1
2. REMOVE EXIST. PAVM'T SECTION AND CONST. PAVM'T. 4" A.C. OVER 12" CAB. OVER 12" COMPACTED.
3. EXISTING CURB AND GUTT. PROTECT IN PLACE
4. ADJUST MH., WATER VALVES ETC. TO GRADE
6. PROTECT EXIST. CROSS GUTTER IN PLACE

NOTE:

AMOUNT OF BASE WILL BE DETERMINED BY SOIL TEST. PROJECT ENGR. SHALL PROVIDE SOIL TESTS, TO BE APPROVED BY THE CITY DEPARTMENT OF PUBLIC WORKS, FOR USE IN DETERMINATION OF PAVM'T/BASE STRUCTURAL SECTION. PLAN MUST BE REVISED TO SHOW ACTUAL BASE TO BE CONSTRUCTED.

NOTE: SEE SHEET C-25 FOR BENCHMARK.

UNDERGROUND SERVICE ALERT

BEFORE COMMENCING ANY EXCAVATION, THE CONTRACTOR SHALL OBTAIN AN UNDERGROUND SERVICE ALERT INQUIRY I.D. NUMBER BY CALLING 1-800-422-4133. TWO (2) WORKING DAYS SHALL BE ALLOWED AFTER THE I.D. NUMBER IS OBTAINED AND BEFORE THE EXCAVATION WORK IS STARTED SO THAT UTILITY OWNERS CAN BE NOTIFIED. THE I.D. NUMBER MUST BE REPORTED TO THE BUREAU OF CONTRACT ADMINISTRATION WHEN CALLED FOR INSPECTION. METRO, (213) 485-3002; VALLEY (818) 949-8335. I.D. NUMBERS WILL NOT BE GIVEN MORE THAN TEN (10) DAYS PRIOR TO STARTING EXCAVATION WORK.

NOTICE TO CONTRACTOR

CONTRACTOR AGREES THAT HE SHALL ASSUME SOLE AND COMPLETE RESPONSIBILITY FOR JOB SITE CONDITIONS DURING THE COURSE OF CONSTRUCTION OF THIS PROJECT, INCLUDING SAFETY OF ALL PERSONS AND PROPERTY; THAT THIS REQUIREMENT SHALL APPLY CONTINUOUSLY AND NOT BE LIMITED TO NORMAL WORKING HOURS; AND THAT THE CONTRACTOR SHALL DEFEND, INDEMNIFY AND HOLD THE OWNER AND THE ENGINEER HARMLESS FROM ANY AND ALL LIABILITY, REAL OR ALLEGED, IN CONNECTION WITH THE PERFORMANCE OF WORK ON THIS PROJECT, EXCEPTING FOR LIABILITY ARISING FROM THE SOLE NEGLIGENCE OF THE OWNER OR THE ENGINEER.

UNDERGROUND STRUCTURES

ALL UNDERGROUND UTILITIES OR STRUCTURES REPORTED BY THE OWNER OR OTHERS AND THOSE SHOWN ON THE RECORDS EXAMINED ARE INDICATED WITH THEIR APPROXIMATE LOCATION AND EXTENT. THE OWNER BY ACCEPTING THESE PLANS OR PROCEEDING WITH IMPROVEMENTS PURSUANT THERETO AGREES TO ASSUME LIABILITY AND TO HOLD UNDERSIGNED HARMLESS FOR ANY DAMAGES RESULTING FROM THE EXISTENCE OF UNDERGROUND UTILITIES OR STRUCTURES NOT REPORTED TO THE UNDERSIGNED; NOT INDICATED ON THE PUBLIC RECORDS EXAMINED; LOCATED AT VARIANCE WITH THAT REPORTED OR SHOWN ON RECORDS EXAMINED. THE CONTRACTOR IS REQUIRED TO TAKE DUE PRECAUTIONARY MEASURES TO PROTECT THE UTILITIES OR STRUCTURES SHOWN AND ANY OTHER UTILITIES OR STRUCTURES FOUND AT THE SITE. IT SHALL BE THE CONTRACTOR'S RESPONSIBILITY TO NOTIFY THE OWNERS OF THE UTILITIES OR STRUCTURES CONCERNED BEFORE STARTING WORK.

Dalcin Cummins Associates
PROFESSIONAL ENGINEERS • LAND DEVELOPMENT CONSULTANTS
Torrance, California 90504
(213) 321-0330 • (213) 327-0018

REV	DATE	BY	DESCRIPTION

SCALE: HORIZ. 1"=40' VERT. 1"=4'

DESIGNED Hans Ellen Brandley
DRAWN Signature
CHECKED Signature

SUBMITTED Project Engineer — C28015 R.C.E. NO. — 5/16/88 DATE

RECOMMENDED James M. Montgomery Consulting Engineers, Inc. — 24656 R.C.E. NO. — 5/18/88 DATE

JAMES M. MONTGOMERY CONSULTING ENGINEERS, INC.
P.O. BOX 7009, 250 N. MADISON AVE., PASADENA, CA 91109-7009

APPROVED Joseph R. Lopez, RCE 18642, City Engineer — 5/18/88 DATE

APPROVED _____ DATE _____

CITY OF SAN FERNANDO

WATER FACILITIES FOR ASSESSMENT DISTRICT NO. D-272

STREET IMPROVEMENT FOR ARROYO AVENUE GLENOAKS BLVD TO STATION 7+50

SHEET C-23 OF 52 SHEETS

JN. 170 A.

JOB NO. ____ FILE ____ CC

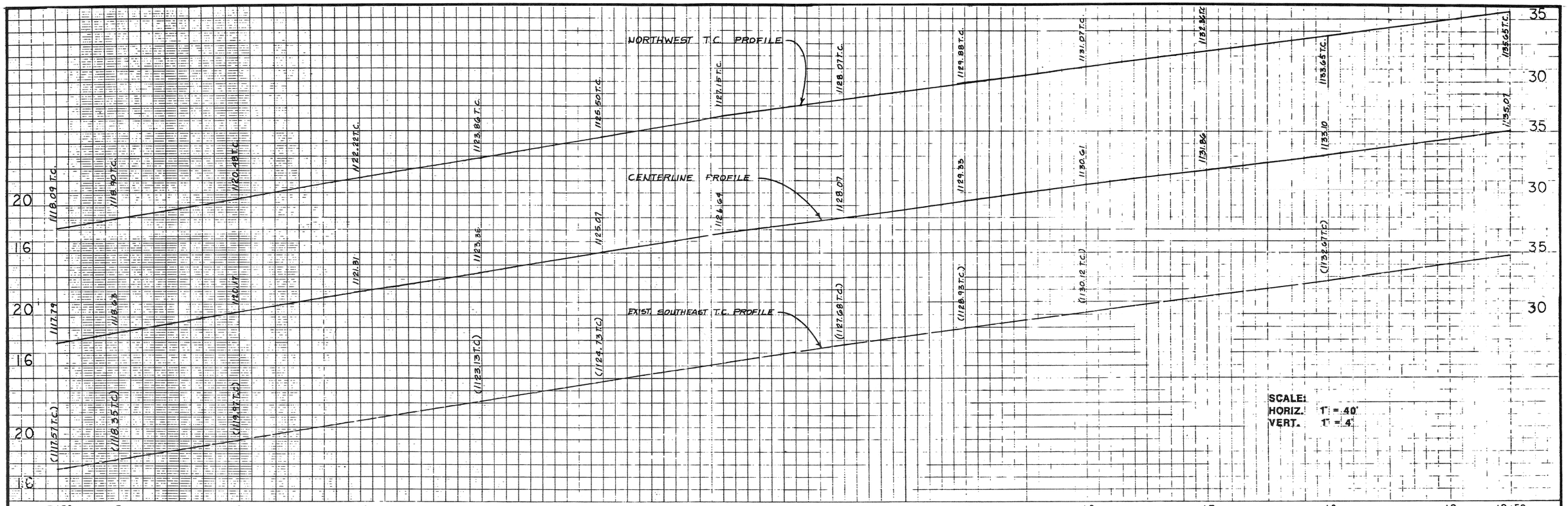

NOTICE TO CONTRACTOR

CONTRACTOR AGREES THAT HE SHALL ASSUME SOLE AND COMPLETE RESPONSIBILITY FOR JOB SITE CONDITIONS DURING THE COURSE OF CONSTRUCTION OF THIS PROJECT, INCLUDING SAFETY OF ALL PERSONS AND PROPERTY; THAT THIS REQUIREMENT SHALL APPLY CONTINUOUSLY AND NOT BE LIMITED TO NORMAL WORKING HOURS; AND THAT THE CONTRACTOR SHALL DEFEND, INDEMNIFY AND HOLD THE OWNER AND THE ENGINEER HARMLESS FROM ANY AND ALL LIABILITY, REAL OR ALLEGED, IN CONNECTION WITH THE PERFORMANCE OF WORK ON THIS PROJECT, EXCEPTING FOR LIABILITY ARISING FROM THE SOLE NEGLIGENCE OF THE OWNER OR THE ENGINEER.

UNDERGROUND STRUCTURES

ALL UNDERGROUND UTILITIES OR STRUCTURES REPORTED BY THE OWNER OR OTHERS AND THOSE SHOWN ON THE RECORDS EXAMINED ARE INDICATED WITH THEIR APPROXIMATE LOCATION AND EXTENT. THE OWNER BY ACCEPTING THESE PLANS OR PROCEEDING WITH IMPROVEMENTS PURSUANT THERETO AGREES TO ASSUME LIABILITY AND TO HOLD UNDERSIGNED HARMLESS FOR ANY DAMAGES RESULTING FROM THE EXISTENCE OF UNDERGROUND UTILITIES OR STRUCTURES NOT REPORTED TO THE UNDERSIGNED; NOT INDICATED ON THE PUBLIC RECORDS EXAMINED; LOCATED AT VARIANCE WITH THAT REPORTED OR SHOWN ON RECORDS EXAMINED. THE CONTRACTOR IS REQUIRED TO TAKE DUE PRECAUTIONARY MEASURES TO PROTECT THE UTILITIES OR STRUCTURES SHOWN AND ANY OTHER UTILITIES OR STRUCTURES FOUND AT THE SITE. IT SHALL BE THE CONTRACTOR'S RESPONSIBILITY TO NOTIFY THE OWNERS OF THE UTILITIES OR STRUCTURES CONCERNED BEFORE STARTING WORK.

UNDERGROUND SERVICE ALERT

BEFORE COMMENCING ANY EXCAVATION, THE CONTRACTOR SHALL OBTAIN AN UNDERGROUND SERVICE ALERT INQUIRY I.D. NUMBER BY CALLING 1-800-422-4133. TWO (2) WORKING DAYS SHALL BE ALLOWED AFTER THE I.D. NUMBER IS OBTAINED AND BEFORE THE EXCAVATION WORK IS STARTED SO THAT UTILITY OWNERS CAN BE NOTIFIED. THE I.D. NUMBER MUST BE REPORTED TO THE BUREAU OF CONTRACT ADMINISTRATION WHEN CALLED FOR INSPECTION. METRO, (213) 485-3002; VALLEY (818) 989-8335. I.D. NUMBERS WILL NOT BE GIVEN MORE THAN TEN (10) DAYS PRIOR TO STARTING EXCAVATION WORK.

NOTE: SEE SHEET C-25 FOR BENCHMARK

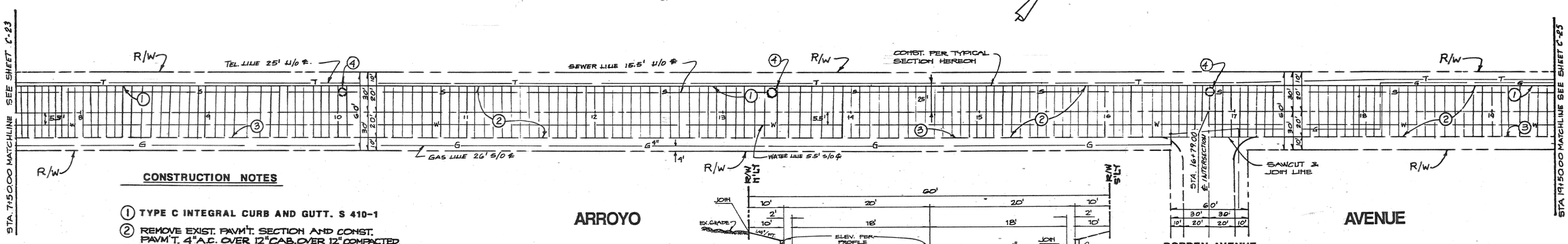

CONSTRUCTION NOTES

1. TYPE C INTEGRAL CURB AND GUTT. S 410-1
2. REMOVE EXIST. PAVM'T. SECTION AND CONST. PAVM'T. 4" A.C. OVER 12" CAB. OVER 12" COMPACTED.
3. EXISTING CURB AND GUTT. PROTECT IN PLACE
4. ADJUST MH., WATER VALVES ETC. TO GRADE

NOTE:

AMOUNT OF BASE WILL BE DETERMINED BY SOIL TEST. PROJECT ENGR. SHALL PROVIDE SOIL TESTS, TO BE APPROVED BY THE CITY DEPT. OF PUBLIC WORKS, FOR USE IN DETERMINATION OF PAVM'T/BASE STRUCTURAL SECTION. PLAN MUST BE REVISED TO SHOW ACTUAL BASE TO BE CONSTRUCTED.

REGISTERED PROFESSIONAL ENGINEER — CHARLES A. CUMMINS — No. 34528 — Ex. 5-30-91 — STATE OF CALIFORNIA

ARROYO AVENUE
STA. 6+50.00 TO STA. 21+71.04

Dalcin Cummins Associates
PROFESSIONAL ENGINEERS • LAND DEVELOPMENT CONSULTANTS
Torrance, California 90504
(213) 321-0330 • (213) 327-0018

REV	DATE	BY	DESCRIPTION

SCALE: HORIZ. 1"=40' VERT. 1"=4'

DESIGNED [illegible]
DRAWN [illegible]
CHECKED [illegible]

SUBMITTED [illegible] PROJECT ENGINEER — C24015 R.C.E. NO. — 5/16/88 DATE

RECOMMENDED [illegible] JAMES M. MONTGOMERY CONSULTING ENGINEERS, INC. — 24656 R.C.E. NO. — 5/18/88 DATE

JAMES M. MONTGOMERY CONSULTING ENGINEERS, INC.
P.O. BOX 7008, 250 N. MADISON AVE., PASADENA, CA 91109-7008

APPROVED [illegible] City Engineer — 5/18/88 DATE

APPROVED _____ DATE

CITY OF SAN FERNANDO

WATER FACILITIES FOR ASSESSMENT DISTRICT NO. D-272

STREET IMPROVEMENT FOR ARROYO AVENUE STATION 7+50 TO STATION 19+50

SHEET C-24 OF 52 SHEETS

JOB NO. _____ FILE _____ DC

JN. 170A

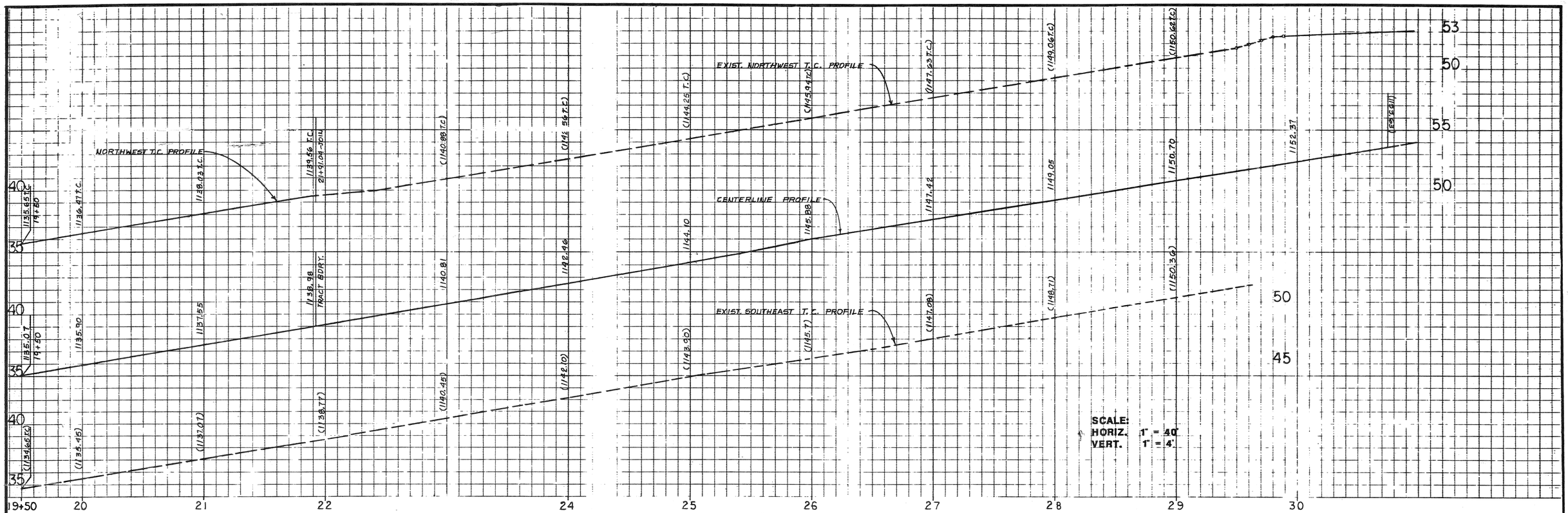

BENCH MARK
USC & GS BM DISK-STMPD Z 898 1955- IN SE
ABUTMENT OF BRIDGE OVER PACOIMA WASH, 5.8FT.
NE OF NE CURB LINE GLENOAKS BLVD. 0.12 MI.
NW. ARROYO AVE.
ELEV. 1118.078 ADJ. 1980

NOTICE TO CONTRACTOR

CONTRACTOR AGREES THAT HE SHALL ASSUME SOLE AND COMPLETE RESPONSIBILITY FOR JOB SITE CONDITIONS DURING THE COURSE OF CONSTRUCTION OF THIS PROJECT, INCLUDING SAFETY OF ALL PERSONS AND PROPERTY; THAT THIS REQUIREMENT SHALL APPLY CONTINUOUSLY AND NOT BE LIMITED TO NORMAL WORKING HOURS; AND THAT THE CONTRACTOR SHALL DEFEND, INDEMNIFY AND HOLD THE OWNER AND THE ENGINEER HARMLESS FROM ANY AND ALL LIABILITY, REAL OR ALLEGED, IN CONNECTION WITH THE PERFORMANCE OF WORK ON THIS PROJECT, EXCEPTING FOR LIABILITY ARISING FROM THE SOLE NEGLIGENCE OF THE OWNER OR THE ENGINEER.

UNDERGROUND STRUCTURES

ALL UNDERGROUND UTILITIES OR STRUCTURES REPORTED BY THE OWNER OR OTHERS AND THOSE SHOWN ON THE RECORDS EXAMINED ARE INDICATED WITH THEIR APPROXIMATE LOCATION AND EXTENT. THE OWNER BY ACCEPTING THESE PLANS OR PROCEEDING WITH IMPROVEMENTS PURSUANT THERETO AGREES TO ASSUME LIABILITY AND TO HOLD UNDERSIGNED HARMLESS FOR ANY DAMAGES RESULTING FROM THE EXISTENCE OF UNDERGROUND UTILITIES OR STRUCTURES NOT REPORTED TO THE UNDERSIGNED; NOT INDICATED ON THE PUBLIC RECORDS EXAMINED; LOCATED AT VARIANCE WITH THAT REPORTED OR SHOWN ON RECORDS EXAMINED. THE CONTRACTOR IS REQUIRED TO TAKE DUE PRECAUTIONARY MEASURES TO PROTECT THE UTILITIES OR STRUCTURES SHOWN AND ANY OTHER UTILITIES OR STRUCTURES FOUND AT THE SITE. IT SHALL BE THE CONTRACTOR'S RESPONSIBILITY TO NOTIFY THE OWNERS OF THE UTILITIES OR STRUCTURES CONCERNED BEFORE STARTING WORK.

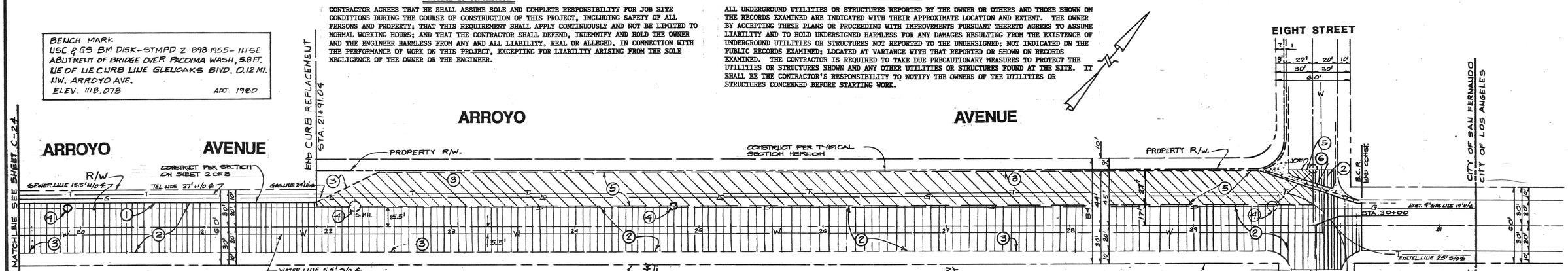

CONSTRUCTION NOTES

1. TYPE C INTEGRAL CURB AND GUTT. S 410-1
2. REMOVE EXIST. PAVM'T SECTION AND CONST. PAVM'T. 4" A.C. OVER 12" CAB. OVER 12" COMPACTED.
3. EXISTING CURB AND GUTT. PROTECT IN PLACE
4. ADJUST MH., WATER VALVES ETC. TO GRADE
5. 1" A.C. OVERLAY OVER EXIST. PAVEMENT
6. PROTECT EXIST. CROSS GUTTER IN PLACE

NOTE: AMOUNT OF BASE WILL BE DETERMINED BY SOIL TEST. PROJECT ENGR. SHALL PROVIDE SOIL TESTS, TO BE APPROVED BY THE CITY DEPT. OF PUBLIC WORKS, FOR USE IN DETERMINATION OF PAVM'T./BASE STRUCTURAL SECTION. PLAN MUST BE REVISED TO SHOW ACTUAL BASE TO BE CONSTRUCTED.

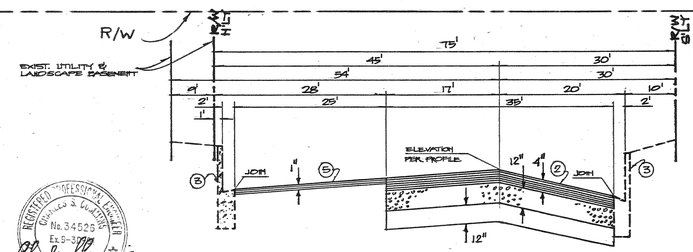

Dalcin Cummins Associates
PROFESSIONAL ENGINEERS - LAND DEVELOPMENT CONSULTANTS
Torrance, California 90504
(213) 321-0330 • (213) 327-0011

REV	DATE	BY	DESCRIPTION

SCALE: HORIZ. 1"=40' VERT. 1"=4'

DESIGNED Wm. Bow Bentley
DRAWN Inspector
CHECKED Jim Klotnick

SUBMITTED Richard D. Montgomery PROJECT ENGINEER — R.C.E. NO. 24015 — DATE 5/16/88

RECOMMENDED James M. Montgomery CONSULTING ENGINEERS, INC. — R.C.E. NO. 24656 — DATE 5/18/88

JAMES M. MONTGOMERY CONSULTING ENGINEERS, INC.
P.O. BOX 7009, 250 N. MADISON AVE., PASADENA, CA 91109-7009

APPROVED Joseph R. Lopez RCE 18642 City Engineer — DATE 5/18/88

APPROVED _____ — DATE _____

CITY OF SAN FERNANDO
WATER FACILITIES FOR ASSESSMENT DISTRICT NO. D-272
STREET IMPROVEMENT FOR ARROYO AVENUE STATION 19+50 TO EIGHTH STREET

SHEET C-25 OF 52 SHEETS

JOB NO. JN. 170A

GENERAL NOTES

GENERAL

STRUCTURAL DIMENSIONS CONTROLLED BY OR RELATED TO MECHANICAL OR ELECTRICAL EQUIPMENT SHALL BE VERIFIED BY THE CONTRACTOR PRIOR TO CONSTRUCTION.

MECHANICAL AND ELECTRICAL EQUIPMENT SUPPORTS, ANCHORAGES, OPENINGS, RECESSES AND REVEALS NOT SHOWN ON THE STRUCTURAL DRAWINGS BUT REQUIRED BY OTHER CONTRACT DRAWINGS, SHALL BE PROVIDED FOR PRIOR TO PLACING CONCRETE.

STRUCTURAL DRAWINGS SHALL BE USED IN COORDINATION WITH MECHANICAL, ELECTRICAL, ARCHITECTURAL, CIVIL DRAWINGS AND SHOP DRAWINGS PROVIDED BY MANUFACTURERS OF EQUIPMENT.

STRUCTURES HAVE BEEN DESIGNED FOR OPERATIONAL LOADS ON THE COMPLETED STRUCTURES. DURING CONSTRUCTION, THE STRUCTURES SHALL BE PROTECTED BY BRACING AND BALANCING WHEREVER EXCESSIVE CONSTRUCTION LOADS MAY OCCUR.

STRUCTURAL

DESIGN IN ACCORDANCE WITH THE 1982 EDITION OF THE UNIFORM BUILDING CODE, EXCEPT WHERE OTHER APPLICABLE CODES OR THE FOLLOWING NOTES ARE MORE RESTRICTIVE.

LOCATION OF ALL CONSTRUCTION JOINTS SHALL BE AS SHOWN ON THE DRAWINGS OR APPROVED BY THE ENGINEER. ALL CONSTRUCTION JOINTS LOCATED ON THE DRAWINGS OR REQUIRED FOR CONSTRUCTION BUT NOT SHOWN ON THE DRAWINGS, SHALL HAVE A 6" FLATSTRIP WATERSTOP. IF IN MEMBERS IN CONTACT WITH WATER, IN ALL SLABS COVERED WITH WATER, CONSTRUCTION JOINTS SHALL HAVE A 6" FLATSTRIP WATERSTOP AND A SEALANT GROOVE.

STRUCTURAL STEEL

STEEL CONSTRUCTION SHALL CONFORM TO THE SPECIFICATIONS AND STANDARDS AS CONTAINED IN THE LATEST EDITION OF THE AISC STEEL CONSTRUCTION MANUAL.

ALL STRUCTURAL SHAPES, BARS, PLATES AND SHEETS SHALL BE OF STEEL MEETING ASTM A-36 SPECIFICATIONS.

ALL WELDING SHALL BE BY THE SHIELDED ARC METHOD AND SHALL CONFORM TO AWS CODE FOR ARC AND GAS WELDING IN BUILDING CONSTRUCTION. QUALIFICATIONS OF WELDERS SHALL BE IN ACCORDANCE WITH THE SPECIFICATIONS FOR STANDARD QUALIFICATION PROCEDURE OF THE AWS.

CONCRETE

UNLESS OTHERWISE NOTED OR SPECIFIED, ALL STRUCTURAL CONCRETE SHALL DEVELOP A MINIMUN COMPRESSIVE STRENGTH OF 4,000 PSI IN 28 DAYS.

REINFORCEMENT STEEL SHALL BE DEFORMED BARS CONFORMING IN QUALITY TO THE REQUIREMENTS OF THE "SPECIFICATIONS FOR DEFORMED BILLET-STEEL BARS FOR CONCRETE REINFORCEMENT" ASTM DESIGNATION A-615, GRADE 60.

COLUMN SPIRALS SHALL CONFORM TO "SPECIFICATION FOR COLD-DRAWN STEEL WIRE FOR CONCRETE REINFORCEMENT" ASTM DESIGNATION A-82.

ALL DETAILING, FABRICATION AND PLACING OF REINFORCING BARS, UNLESS OTHERWISE NOTED, SHALL BE IN ACCORDANCE WITH THE "MANUAL OF STANDARD PRACTICE FOR DETAILING REINFORCED CONCRETE STRUCTURES" ACI-315, LATEST EDITION.

UNLESS OTHERWISE SHOWN ON THE DRAWINGS CONCRETE COVER FOR REINFORCING BARS SHALL BE AS FOLLOWS:

FOR CONCRETE PLACED AGAINST EARTH ——— 3"

FOR SURFACES ON CONTACT WITH WATER, COLUMNS AND FORMED SURFACES IN CONTACT WITH EARTH —— 2"

FOR UNDERSIDE OF SLABS OVER WATER IN ENCLOSED CONDUITS AND BEAMS ———— 1-1/2"

FOR SURFACES EXPOSED TO WEATHER AND INTERIOR SURFACES (EXCEPT BEAMS AND COLUMNS) NOT IN CONTACT WITH EARTH OR WATER ———— 1"

UNLESS OTHERWISE NOTED, WALLS AND SLABS SHOWN WITH A SINGLE LAYER OF REINFORCEMENT SHALL HAVE THAT REINFORCEMENT CENTERED.

TOLERANCES IN PLACING REINFORCEMENT SHALL BE:
- ±3/8 INCH FOR MEMBERS WITH D ≤ 8 INCHES
- ±1/2 INCH FOR MEMBERS WITH D > 8 INCHES

ALL KEYWAYS IN CONSTRUCTION JOINS SHALL BE ROUGH AND THOROUGHLY CLEANED FOR BOND

DOWELS, PIPES, WATERSTOPS AND OTHER INSTALLED MATERIALS AND ACCESSORIES SHALL BE HELD SECURELY IN POSITION WHILE CONCRETE IS BEING PLACED.

UNLESS OTHERWISE SHOWN, ASIDE FROM NORMAL ACCESSORIES USED TO HOLD REINFORCING BARS FIRMLY IN POSITION, THE FOLLOWING SHALL BE ADDED:
- A) IN SLABS #5 RISER BARS AT 36 INCHES O.C. MAXIMUM TO SUPPORT TOP REINFORCING BARS.
- B) IN WALLS WITH 2 CURTAINS #3 U OR Z SHAPE SPACERS AT 6 FEET O.C. EACH WAY.

METAL CLIPS OR SUPPORTS SHALL NOT BE PLACED IN CONTACT WITH THE FORMS OR THE SUBGRADE. CONC. BLOCKS (OR DOBBIES) SUPPORTING BARS ON SUBGRADE SHALL BE IN SUFFICIENT NUMBERS TO SUPPORT THE BARS W/O SETTLEMENT, BUT IN NO CASE SHALL SUPPORT BE CONTINUOUS.

DOWELS SHALL BE WIRED OR OTHERWISE HELD IN POSITION. THEY SHALL NOT BE SHOVED INTO FRESHLY PLACED CONCRETE.

UNLESS OTHERWISE NOTED ON THE DRAWINGS, SPLICES OF REINFORCEMENT SHALL BE AS SHOWN ON DETAIL C, SHEET S-2.

LOCATE TWO 3/4" GALV. RICHMOND ROCKET INSERTS, HOHMANN & BARNARD OR EQUAL, STRADDLING CENTER LINE OF EQUIPMENT OVER ALL PUMPS, METERS OR OTHER MECHANICAL UNITS OF MORE THAN 100 LBS. FOR INSERTING LIFTING EYES IF NOT OTHERWISE SHOWN ON THE DRAWINGS.

REINFORCING BARS AND ACCESSORIES SHAL NOT BE IN CONTACT WITH ANY PIPE, PIPE PLANGE OR METAL PARTS EMBEDDED IN CONCRETE, A MINIMUM OF 2 INCHES CLEARANCE SHALL BE PROVIDED AT ALL TIMES.

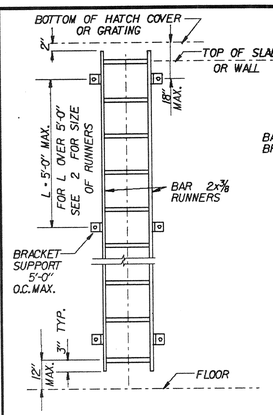

STANDARD LADDER WITH RUNNER SUPPORTS AT 5'-0" O.C. MAX.

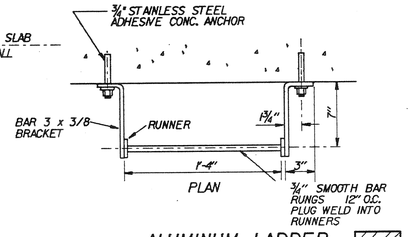

ALUMINUM LADDER — A

STAINLESS STEEL LADDER — B

GALVANIZED STEEL LADDER — C

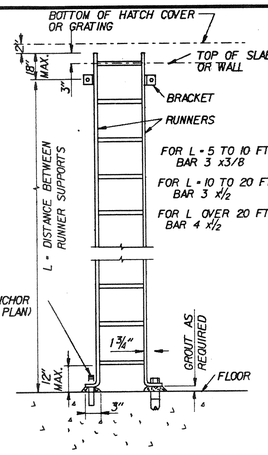

LADDER WITH RUNNER SUPPORTS OVER 5'-0" O.C.

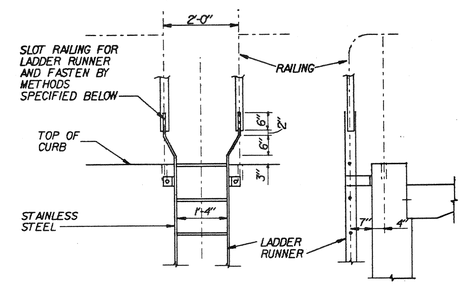

CONNECTIONS:
STEEL TO STEEL
WELDED CONNECTION. GRIND SMOOTH.

LADDER TO RAILING CONNECTIONS — D

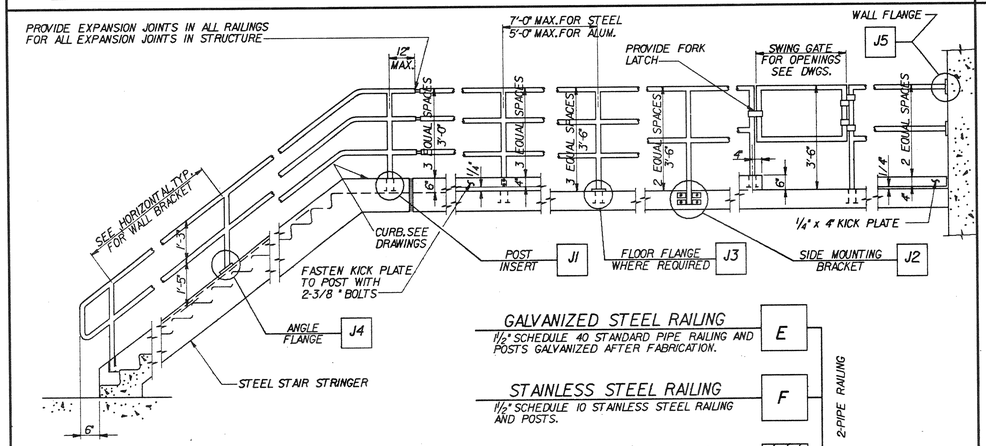

GALVANIZED STEEL RAILING — E
1½" SCHEDULE 40 STANDARD PIPE RAILING AND POSTS GALVANIZED AFTER FABRICATION.

STAINLESS STEEL RAILING — F
1½" SCHEDULE 10 STAINLESS STEEL RAILING AND POSTS.

ALUMINUM RAILING — G
1½" SCHEDULE 40 STANDARD PIPE RAILING AND POSTS WITH MECHANICAL JOINTS.

2-PIPE RAILING

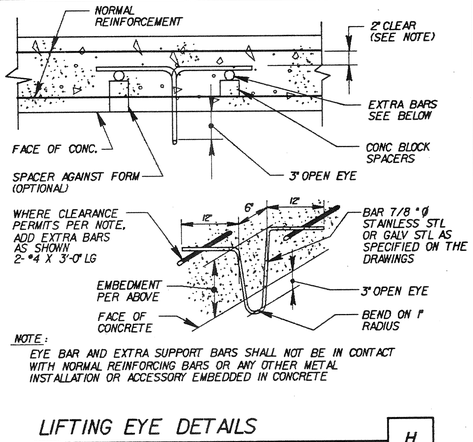

NOTE:
EYE BAR AND EXTRA SUPPORT BARS SHALL NOT BE IN CONTACT WITH NORMAL REINFORCING BARS OR ANY OTHER METAL INSTALLATION OR ACCESSORY EMBEDDED IN CONCRETE

LIFTING EYE DETAILS — H

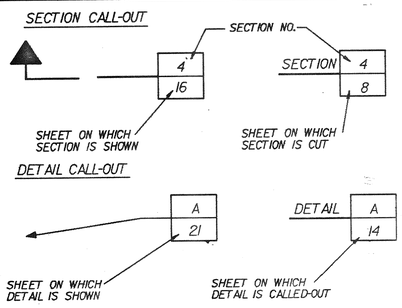

THE DETAILS ILLUSTRATED ON SHEETS S-1 THRU S-2 ARE PART OF JAMES M. MONTGOMERY STANDARD DETAILS.

THESE DETAILS ARE TO BE USED WHEN REFERRED TO OR WHEN NO OTHER MORE RESTRICTIVE OR DIFFERENT DETAILS ARE SHOWN ON THE DRAWING.

DETAILS NOT PERTAINING TO THE PROJECT ARE MARKED THUS ▨ N.I.C. (NOT IN CONTRACT)

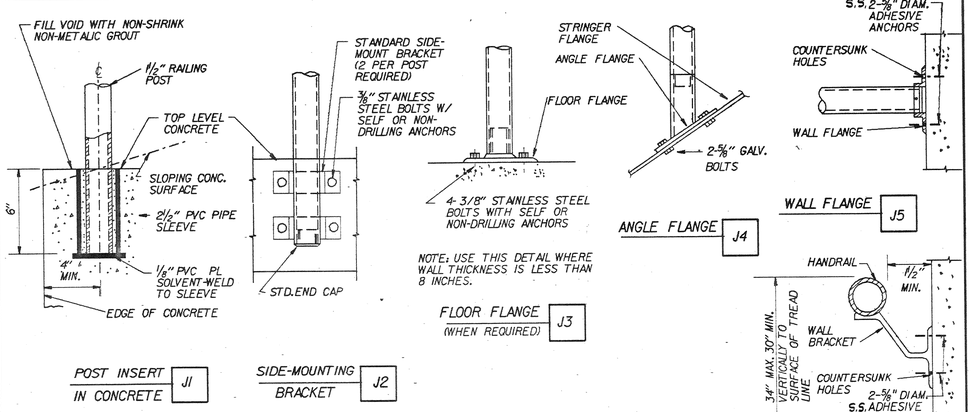

POST INSERT IN CONCRETE — J1

SIDE-MOUNTING BRACKET — J2

FLOOR FLANGE (WHEN REQUIRED) — J3

ANGLE FLANGE — J4

WALL FLANGE — J5

HANDRAIL WALL BRACKET — J6

RAILING, GUARDRAIL AND HANDRAIL SUPPORT DETAILS — J

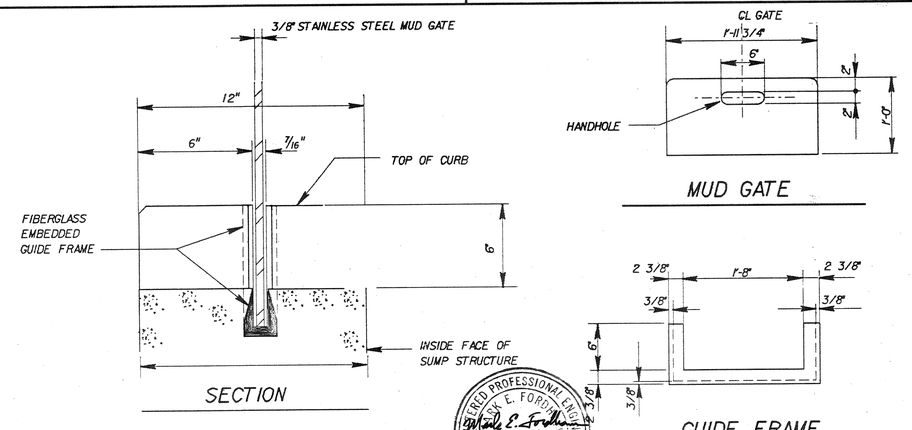

MUD GATE DETAILS — K

REGISTERED PROFESSIONAL ENGINEER — JACK E. FORDHAM — No. SE2634 — 6-30-88 — STRUCTURAL — STATE OF CALIFORNIA

REV	DATE	BY	DESCRIPTION

SCALE: NONE

DESIGNED JMM STANDARD
DRAWN
CHECKED MEFordham

SUBMITTED David J. Engel, PROJECT ENGINEER — C 24015, R. C. E. NO. — 5/16/88, DATE

JAMES M. MONTGOMERY CONSULTING ENGINEERS, INC. — 24656, R. C. E. NO. — 5/16/88, DATE

JAMES M. MONTGOMERY CONSULTING ENGINEERS, INC.
P.O. BOX 7009, 250 N. MADISON AVE., PASADENA, CA. 91109-7009

APPROVED Joseph R. Rigney, ACE 18642, City Engineer — 5/18/88, DATE

APPROVED _____ DATE

CITY OF SAN FERNANDO
WATER FACILITIES FOR ASSESSMENT DISTRICT NO.-272
GENERAL NOTES AND STANDARD DETAILS

SHEET S-1 OF 52 SHEETS

JOB No. 18.0161 FILE No. ZFB3.012\J3513FSLDGN

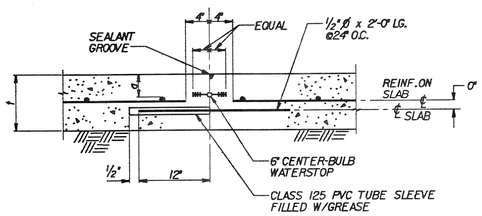

SINGLE MAT REINF.-SLEEVE-TYPE JOINT
(TYP. CONSTRUCTION JOINT UNLESS OTHERWISE NOTED)
WITH WATERSTOP AND SEALANT GROOVE — A1

NO WATERSTOP OR SEALANT GROOVE — A2

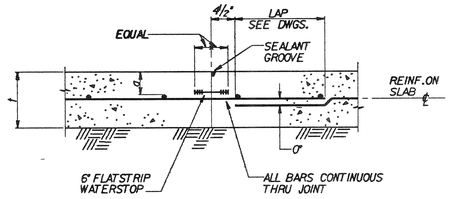

SINGLE MAT REINF.-CONTINUOUS THRU JOINT
(ONLY WHEN SPECIFIED ON DRAWINGS)
WITH WATERSTOP AND SEALANT GROOVE — A3

NO WATERSTOP OR SEALANT GROOVE — A4

t	a
6"	2"
7"	2½"
8"	2½"

SLAB-ON-GRADE CONSTRUCTION JOINT DETAILS — A

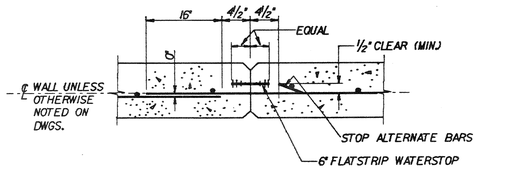

SINGLE CURTAIN REINF.

WITH WATERSTOP — B1

NO WATERSTOP — B2

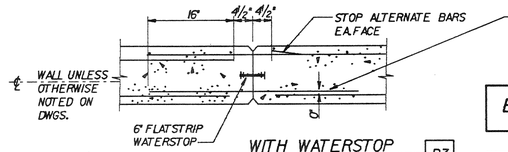

DOUBLE CURTAIN REINF.

WITH WATERSTOP — B3

NO WATERSTOP — B4

NOTES:

1. IN ALL WALL CONSTRUCTION JOINTS WITH WATERSTOPS APPLY 2 COATS OF BOND BREAKER TO FACE OF JOINT, AVOID COATING WATERSTOP.
2. WHERE WATERSTOP IS REQUIRED IN SINGLE CURTAIN WALL REINF. PLACE WATERSTOP ON WATER SIDE OF WALL.

OPTIONAL DOWELING METHOD USE SAME METHOD EA.FACE DOWELS TO MATCH ALTERNATE WALL BARS. THIS METHOD MAY ALSO BE USED FOR SINGLE CURTAIN REINF.

B — WALL CONSTRUCTION JOINT DETAILS — B

*4 HORIZONTAL BARS ALTERNATE BARS STOPPED AT JOINT.

UNLESS OTHERWISE NOTED *5 AND LARGER HORIZONTAL BARS ALL BARS CONT. THRU JOINT.

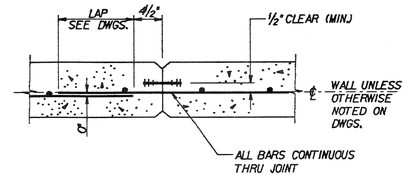

SINGLE CURTAIN REINF.

WITH WATERSTOP — B5

NO WATERSTOP — B6

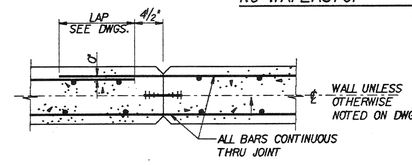

DOUBLE CURTAIN REINF.

WITH WATERSTOP — B7

NO WATERSTOP — B8

BAR SIZE	f'C = 3000 psi		f'C = 4000 psi	
	GRADE 40	GRADE 60	GRADE 40	GRADE 60
#3	20"	20"	20"	20"
#4	20"	20"	20"	20"
#5	20"	26"	20"	26"
#6	22"	33"	20"	31"
#7	31"	45"	26"	39"
#8	39"	59"	34"	51"
#9	49"	74"	43"	65"
#10	63"	95"	55"	82"
#11	78"	116"	67"	101"

NOTE: FOR TOP REINF. MULTIPLY ALL ABOVE LAP LENGTHS BY 1.4. TOP BARS ARE DEFINED AS THOSE HAVING 12" OF CONCRETE BELOW THEM.

STANDARD BAR SPLICES
(UNLESS OTHERWISE NOTED ON THE DWGS) — C

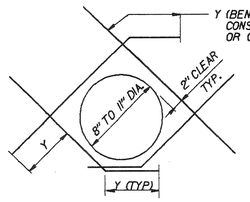

BAR SIZE	"Y"
	GRADE 60
#4	12"
#5	15"
#6	18"
#7	24"
#8	30"

1. CUT NORMAL REINFORCEMENT AT OPENING
2. DIAGONAL BARS TO BE PLACED:
   A. AT ℄ OF WALL OR SLAB WHERE ONE LAYER OF REINFORCEMENT IS PROVIDED.
   B. AT EACH FACE OF WALL OR SLAB WHERE TWO LAYERS OF REINFORCEMENT ARE PROVIDED
3. UNLESS OTHERWISE NOTED, SIZE OF DIAGONAL BARS SHALL BE THE SIZE OF THE LARGEST NORMAL REINF. BAR CUT.
4. THIS DETAIL TO BE USED ONLY WHEN CALLED FOR ON THE DRAWINGS OR WHEN NO OTHER DETAIL IS SPECIFIED.

DIAGONAL REINFORCEMENT AT CIRCULAR OPENINGS — D

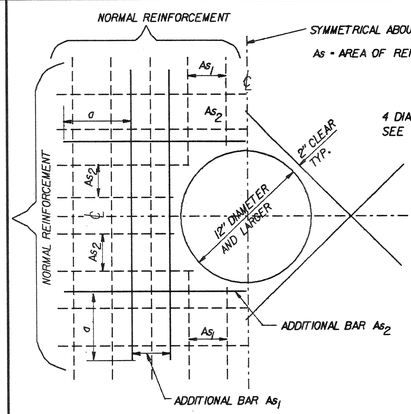

BAR SIZE	"d"
	GRADE 60
#4	15"
#5	21"
#6	24"
#7	27"
#8	36"
#9	42"
#10	48"

1. CUT NORMAL REINFORCEMENT AT OPENINGS: AS_1 AND AS_2 + ½ AREA OF CUT BARS TO BE ADDED ON EACH SIDE OF OPENING.
2. ADDITIONAL BARS AS_1 AND AS_2 TO BE PLACED:
   a) AT ℄ OF WALLS OR SLABS WHERE ONE LAYER OF REINFORCEMENT IS PROVIDED.
   b) AT EACH FACE OF WALLS OR SLABS WHERE TWO LAYERS OF REINFORCEMENT ARE PROVIDED.
3. THIS DETAIL TO BE USED ONLY WHEN NO OTHER DETAIL IS INDICATED ON THE DRAWINGS.

ADDITIONAL REINFORCEMENT AT CIRCULAR OPENINGS — E

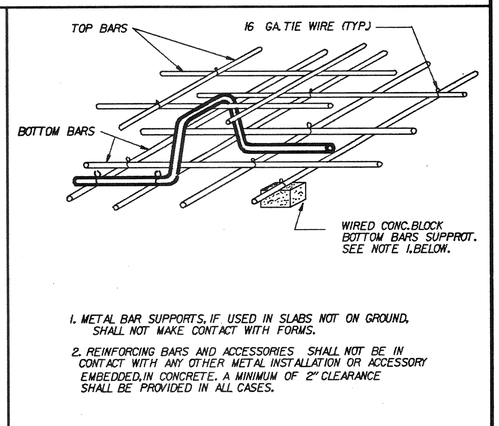

1. METAL BAR SUPPORTS, IF USED IN SLABS NOT ON GROUND, SHALL NOT MAKE CONTACT WITH FORMS.
2. REINFORCING BARS AND ACCESSORIES SHALL NOT BE IN CONTACT WITH ANY OTHER METAL INSTALLATION OR ACCESSORY EMBEDDED IN CONCRETE. A MINIMUM OF 2" CLEARANCE SHALL BE PROVIDED IN ALL CASES.

BAR CHAIR REINFORCEMENT SUPPORT — F

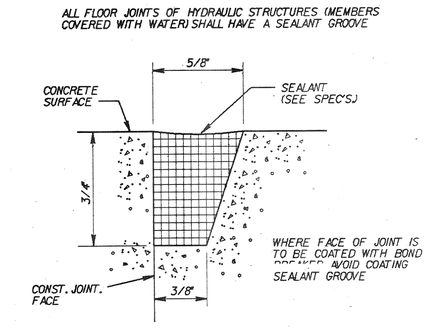

SEALANT GROOVE — G

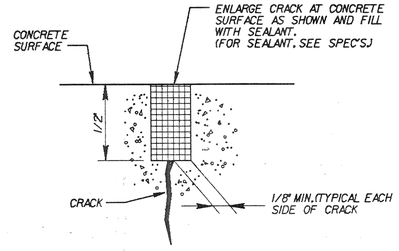

NOTE:

PRIOR TO FILLING, STRUCTURES TO CONTAIN WATER SHALL HAVE ALL CRACKS REPAIRED AS SHOWN IN THIS DETAIL.

CONCRETE CRACK REPAIR — H

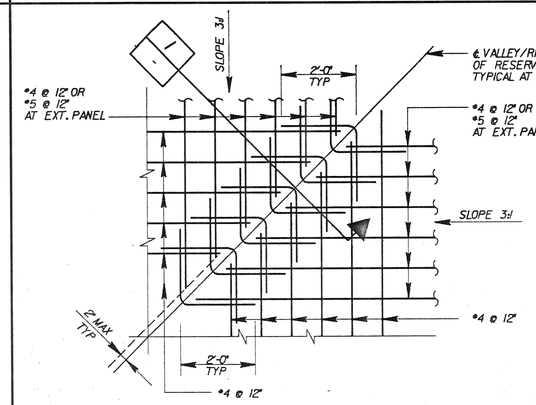

REINFORCEMENT DETAIL IN FLOOR SLAB RIDGE/VALLEY AT CORNERS — J

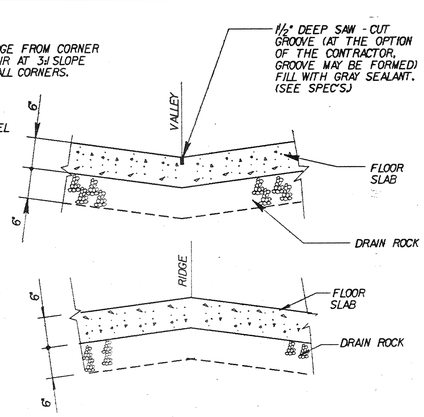

SECTION — I

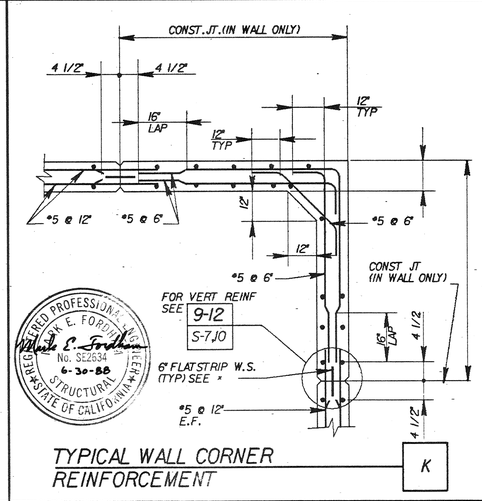

TYPICAL WALL CORNER REINFORCEMENT — K

REV	DATE	BY	DESCRIPTION

SCALE: NONE

DESIGNED JMM STANDARD
DRAWN
CHECKED MC Fordham

SUBMITTED
PROJECT ENGINEER — C24015 R. C. E. NO. — 5/16/88 DATE

JAMES M. MONTGOMERY CONSULTING ENGINEERS, INC. — 24656 R. C. E. NO. — 5/16/88 DATE

JAMES M. MONTGOMERY CONSULTING ENGINEERS, INC.
P.O. BOX 7009, 250 N. MADISON AVE. PASADENA, CA. 91109-7009

APPROVED — City Engineer RCE 18442 — 5/18/88 DATE

APPROVED — DATE

CITY OF SAN FERNANDO
WATER FACILITIES FOR ASSESSMENT DISTRICT NO.-272
STANDARD DETAILS

SHEET S-2 OF 52 SHEETS

JOB No. 18.0161 FILE No. ZFB3d12L3515FS2.DGN

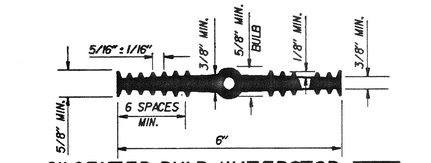

6" CENTER-BULB WATERSTOP — A

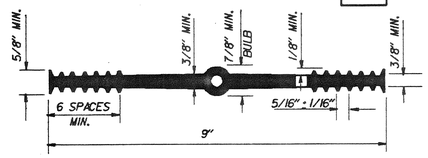

9" CENTER-BULB WATERSTOP — B

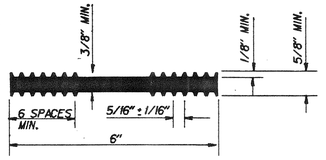

6" FLATSTRIP WATERSTOP — C

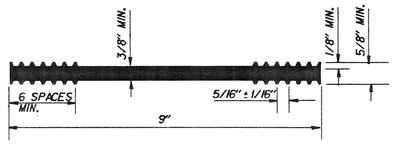

9" FLATSTRIP WATERSTOP — D

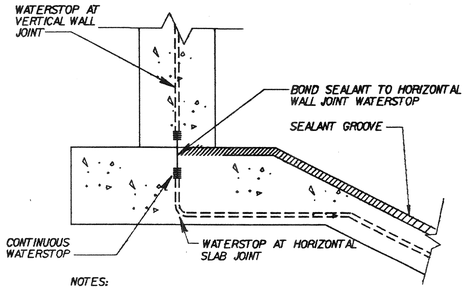

NOTES:
SEALANT GROOVE SHALL BE CONTINUED UNDER WALL & SEALANT SHALL BOND WITH WALL WATERSTOP IN ALL CASES WHERE SUCH WATERSTOP OCCURS

SEALANT UNDER WALL SHALL BE IN PLACE PRIOR TO PLACEMENT OF CONCRETE FOR WALL.

SEALANT GROOVE UNDER WALL — E

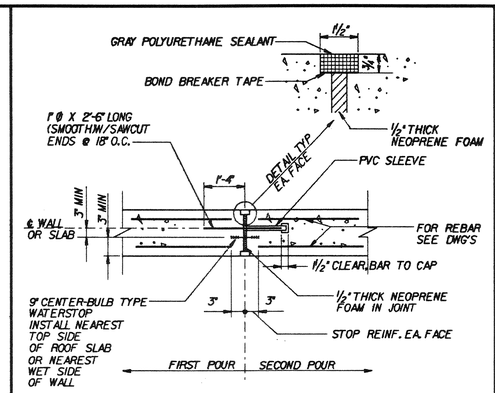

WALL OR SLAB EXPANSION JOINT — F

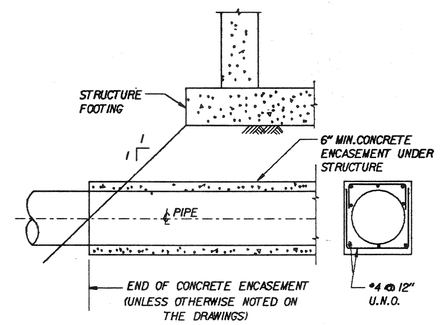

END OF PIPE ENCASEMENT UNDER STRUCTURES — G

S-111

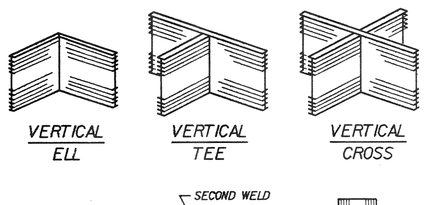

FLATSTRIP WATERSTOPS PREFABRICATED JOINTS — H

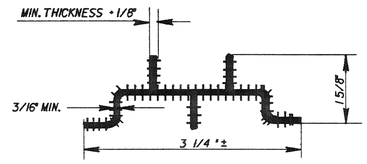

2 - RIB WATERSTOP — J

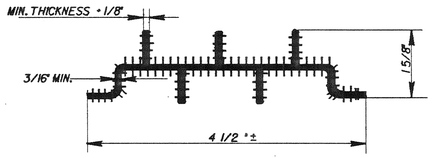

3 - RIB WATERSTOP — K

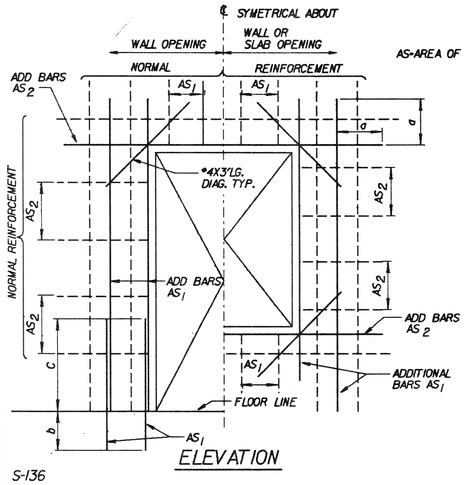

S-136

ELEVATION

AS=AREA OF REINFORCEMENT

BAR SIZE	GRADE 40 a	b	c	GRADE 60 a	b	c
#4	16"	12"	20"	16"	12"	20"
#5	16"	15"	20"	20"	15"	26"
#6	17"	15"	22"	24"	18"	31"
#7	23"	18"	31"	30"	24"	39"
#8	30"	24"	39"	39"	30"	51"
#9	38"	30"	49"	49"	38"	65"
#10	48"	36"	63"	63"	48"	82"

① CUT NORMAL REINFORCEMENT AT OPENING: AS AND AS - ½ AREA OF CUT BARS TO BE ADDED ON EACH SIDE OF OPENING.
② ADDITIONAL BARS AS1 AND AS2 TO BE PLACED:
a) AT ℄ OF WALLS OR SLABS WHERE ONE LAYER OF REINFORCEMENT IS PROVIDED.
b) AT EACH FACE OF WALLS OR SLABS WHERE TWO LAYERS OF REINFORCEMENT ARE PROVIDED.
③ THIS DETAIL TO BE USED ONLY WHEN NO OTHER DETAIL IS INDICATED ON THE DRAWINGS.

ADDITIONAL REINFORCEMENT AROUND RECTANGULAR OPENINGS — N

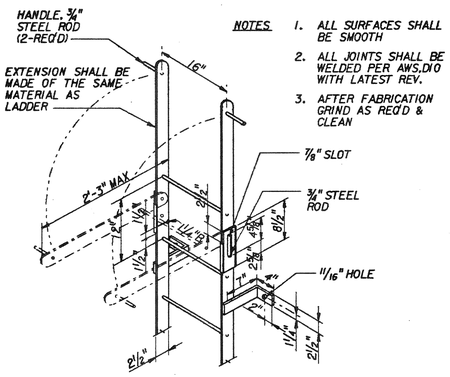

NOTES
1. ALL SURFACES SHALL BE SMOOTH
2. ALL JOINTS SHALL BE WELDED PER AWS, D1.0 WITH LATEST REV.
3. AFTER FABRICATION GRIND AS REQ'D & CLEAN

HINGED LADDER EXTENSION — P

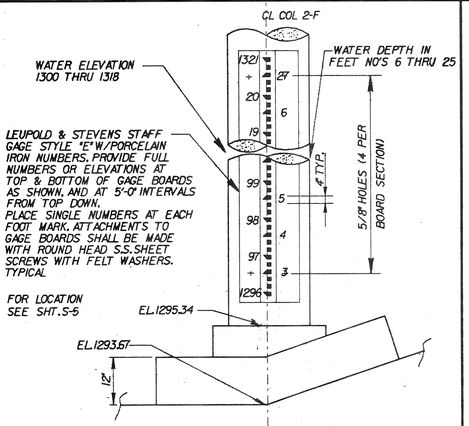

WATER LEVEL STAFF GAGE DETAIL — L

N.T.S.

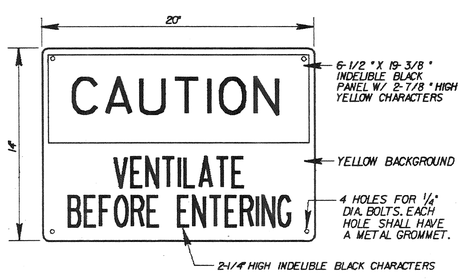

NOTE:
WARNING SIGN TO BE ABLE TO BEND TO A 9" RADIUS. MATERIAL TO BE .060" THICK BUTYRATE OR APPROVED EQUAL, STYLE RAS, AS MANUFACTURED BY SETON NAME PLATE CORPORATION, NEW HAVEN, CONN., 06505, W.H. BRADY COMPANY, MILWAUKEE, WIS., 53201, OR EQUAL. SIGN TO BE ATTACHED IN CONSPICUOUS LOCATION AT ENTRY TO UNDERGROUND STRUCTURE.

VENTILATION WARNING SIGN FOR UNDERGROUND STRUCTURES — M

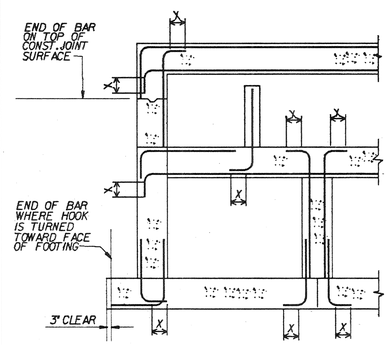

SECTION

S-132

GRADE 40 OR 60 REINF. STEEL

BAR SIZE	90 HOOKS "X"
#3	6"
#4	8"
#5	10"
#6	12"
#7	14"
#8	16"
#9	19"
#10	22"
#11	24"

STANDARD 90° BAR HOOKS — Q

UNLESS OTHERWISE NOTED ON DWGS.

REGISTERED PROFESSIONAL ENGINEER — MARK E. FORDHAM — No. SE2... — 6-30-88 — STRUCTURAL — STATE OF CALIFORNIA

REV	DATE	BY	DESCRIPTION

SCALE: NONE

DESIGNED JMM STANDARD
DRAWN
CHECKED MF Fordham

SUBMITTED Kamal D. Gangil, PROJECT ENGINEER — C24015, R. C. E. NO. — 5/16/88, DATE
JAMES M. MONTGOMERY CONSULTING ENGINEERS, INC. — 24656, R. C. E. NO. — 5/16/88, DATE

JAMES M. MONTGOMERY CONSULTING ENGINEERS, INC.
P.O. BOX 7009, 250 N. MADISON AVE. PASADENA, CA. 91109-7009

APPROVED Joseph R. Lopez, R.C.E. 18642, City Engineer — 5/19/88, DATE
APPROVED — DATE

CITY OF SAN FERNANDO
WATER FACILITES FOR ASSESSMENT DISTRICT NO.-272
STANDARD DETAILS

SHEET S-3 OF 52 SHEETS

JOB No. 18.061 FILE No. ZFB3:I12_3\S1SF S3.DGN

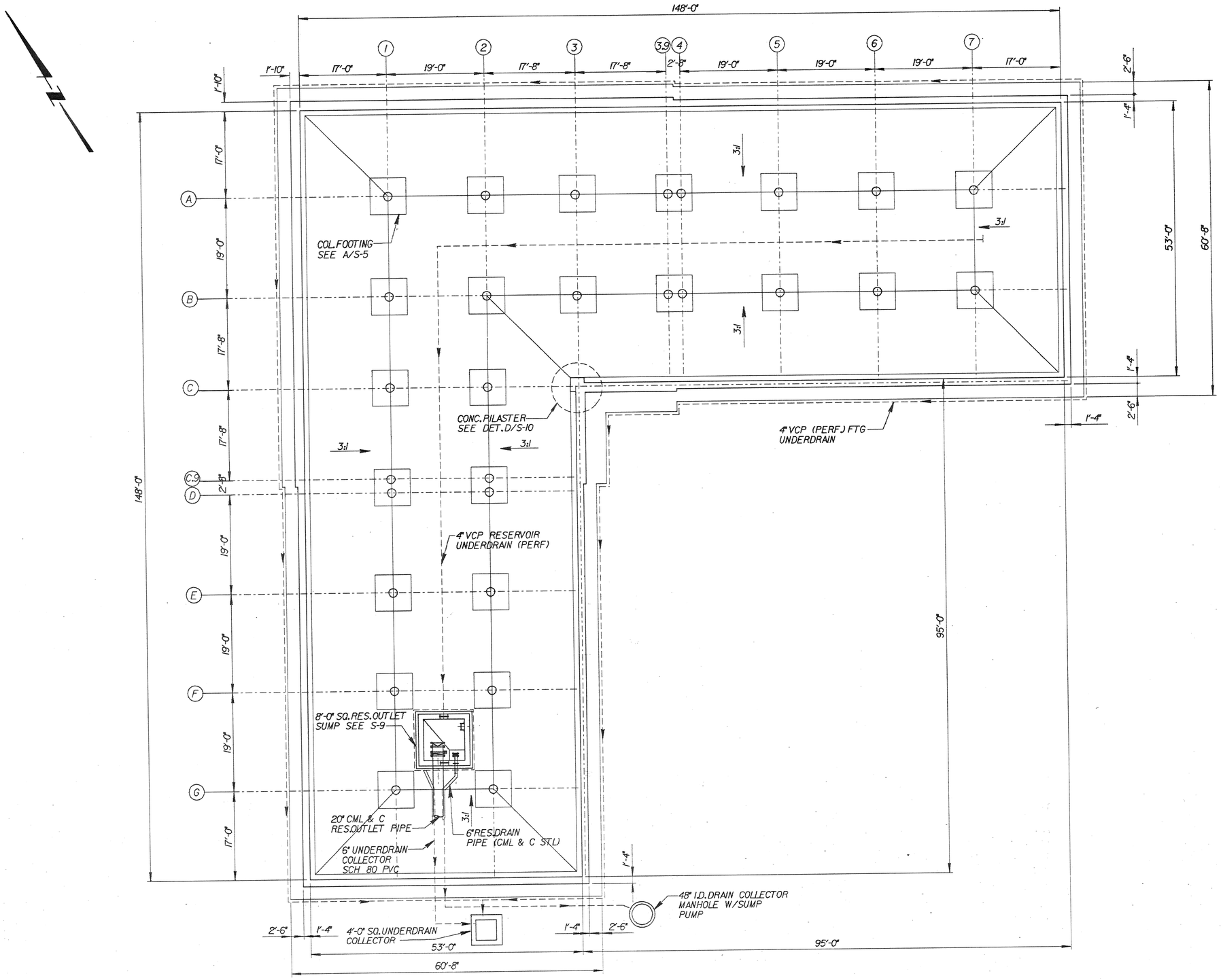

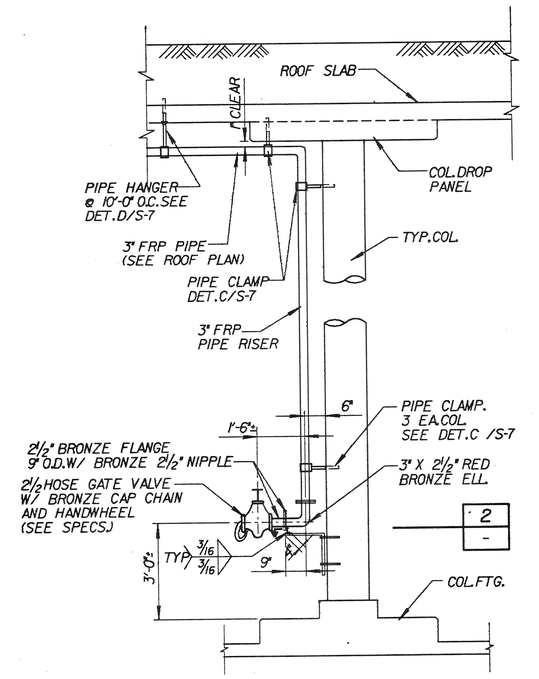

TYPICAL UTILITY WATER HOSE GATE VALVE ELEVATION

N.T.S.

A
S-6

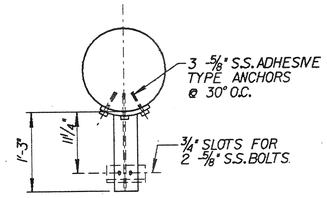

PLAN

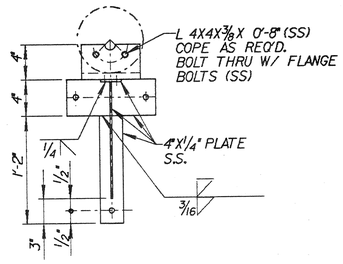

ELEVATION

SECTION

N.T.S.

2
-

REGISTERED PROFESSIONAL ENGINEER
Mark E. Fordham
6-30-88
STATE OF CALIFORNIA

REV	DATE	BY	DESCRIPTION

SCALE: 1/10 " = 1'-0"

DESIGNED Irma Gonzalez
DRAWN Irma Gonzalez
CHECKED M E Fordham

SUBMITTED
PROJECT ENGINEER — C24015 R. C. E. NO. — 5/16/88 DATE
JAMES M. MONTGOMERY CONSULTING ENGINEERS, INC. — 24656 R. C. E. NO. — 5/16/88 DATE

JAMES M. MONTGOMERY CONSULTING ENGINEERS, INC.
P.O. BOX 7009, 250 N. MADISON AVE. PASADENA, CA. 91109-7009

APPROVED Joseph R. Lopez RCE 18642 City Engineer — 5/18/88 DATE
APPROVED — DATE

CITY OF SAN FERNANDO
WATER FACILITIES FOR ASSESSMENT DISTRICT NO.-272
UNDERDRAIN PLAN AND DETAILS

SHEET S-4 OF 52 SHEETS

JOB No. 18.0161 FILE No. ZFB3:(121,315)SFS4.DGN

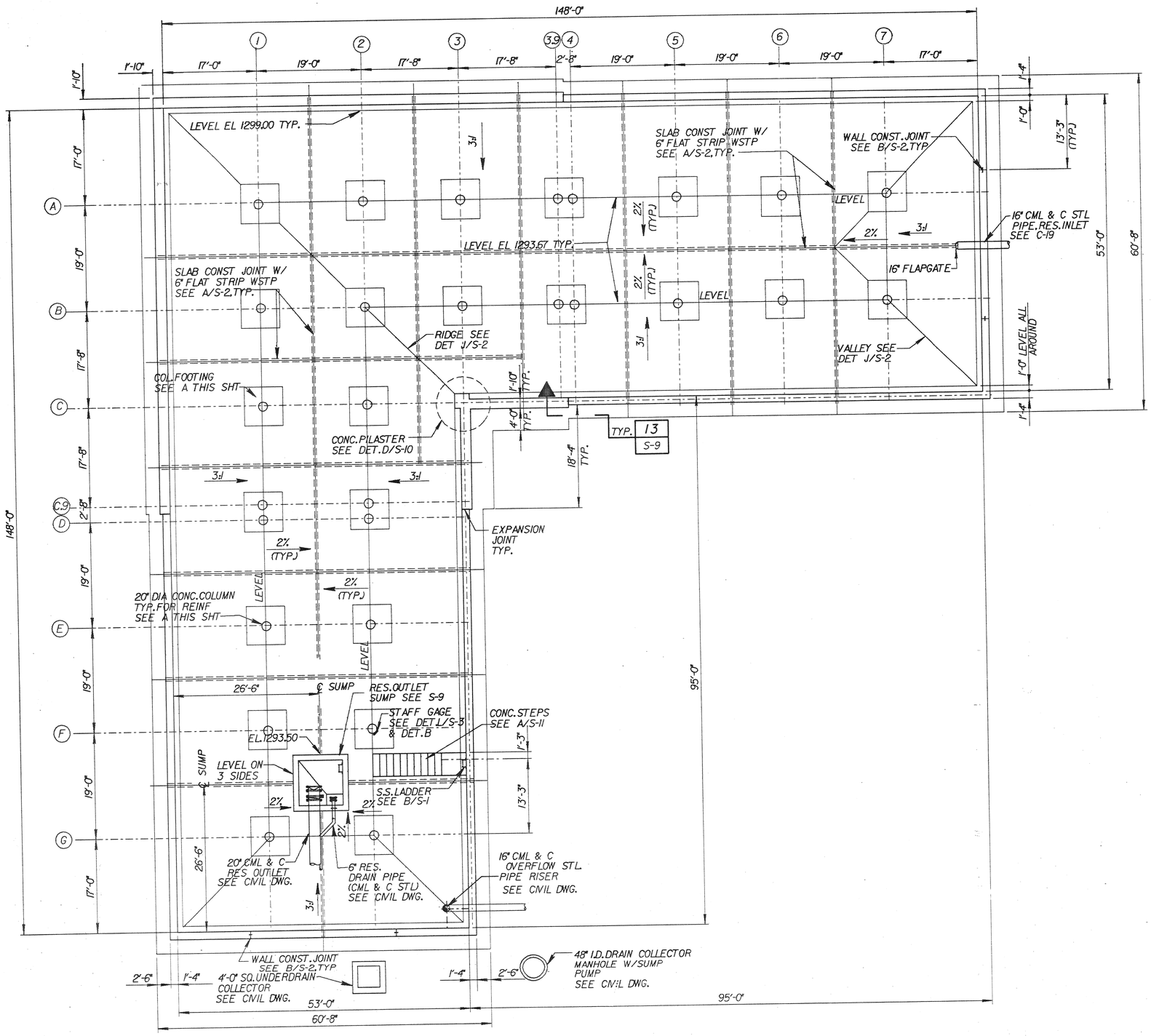

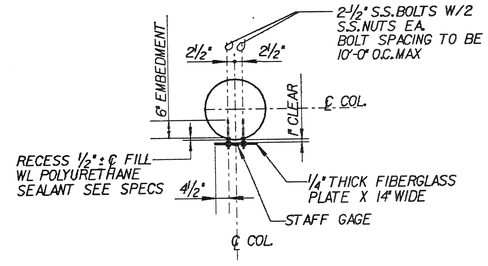

STAFF GAGE DETAIL B
N.T.S.

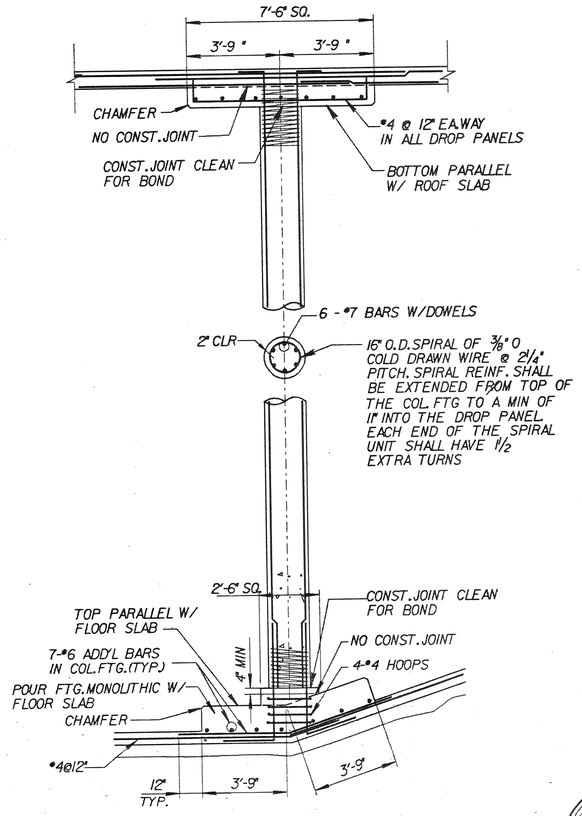

TYPICAL COLUMN DETAIL A
N.T.S.

Mark E. Fordham
6-30-88

REV	DATE	BY	DESCRIPTION

SCALE: 1/10" = 1'-0"

DESIGNED Irma Jurado
DRAWN Irma Jurado
CHECKED M.E. Fordham

SUBMITTED: PROJECT ENGINEER — C24015 R. C. E. NO. — 5/16/88 DATE
JAMES M. MONTGOMERY CONSULTING ENGINEERS, INC. — 24656 R. C. E. NO. — 5/16/88 DATE

JAMES M. MONTGOMERY CONSULTING ENGINEERS, INC.
P.O. BOX 7009, 250 N. MADISON AVE. PASADENA, CA. 91109-7009

APPROVED Joseph L. Ropley RCE 18642 City Engineer — 5/18/88 DATE
APPROVED — DATE

CITY OF SAN FERNANDO
WATER FACILITES FOR ASSESSMENT DISTRICT NO.-272
FLOOR AND FOUNDATION PLAN

SHEET S-5 OF 52 SHEETS

JOB No. 18.0161 FILE No. ZFB3:(121,315)SF-S5.DGN

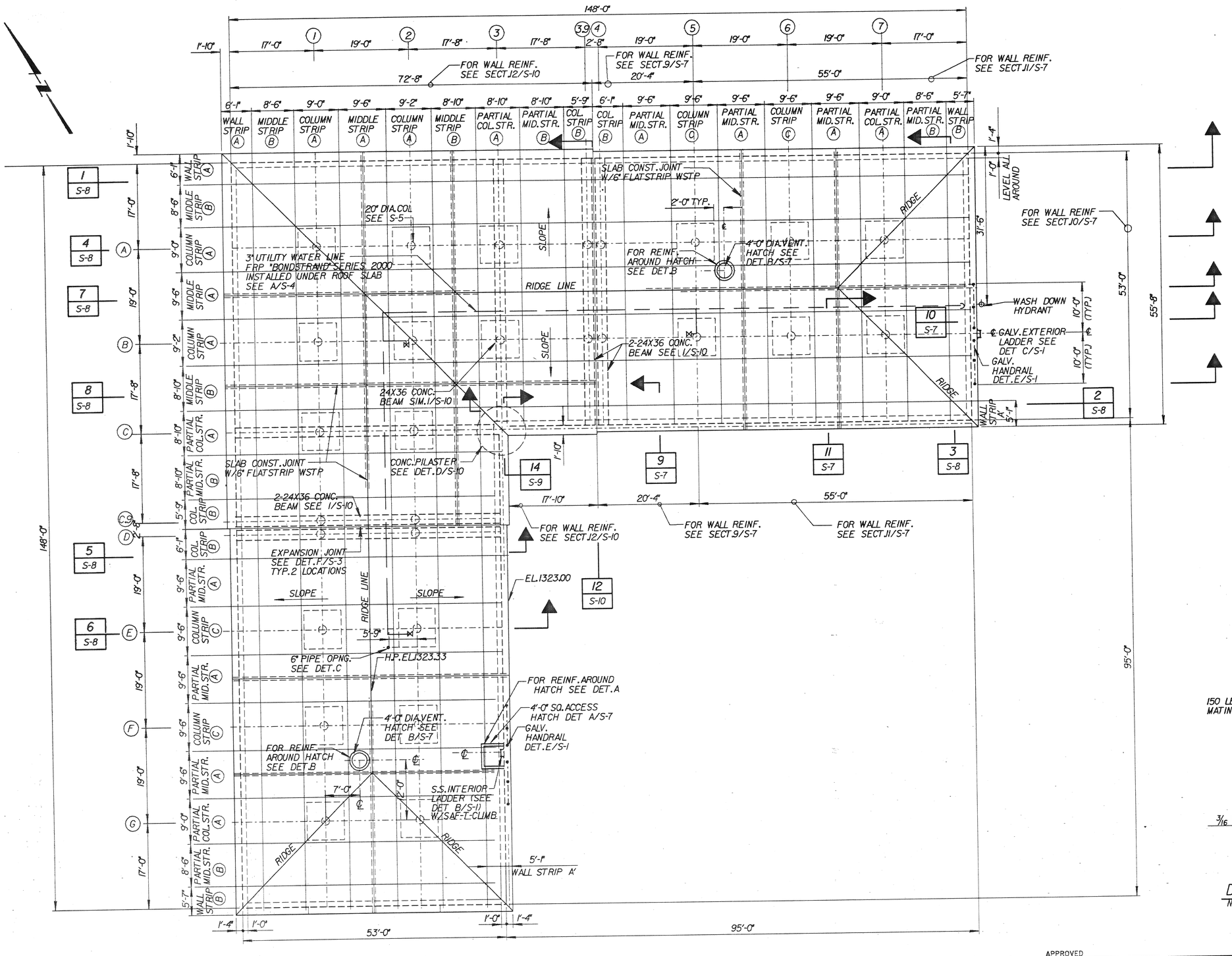

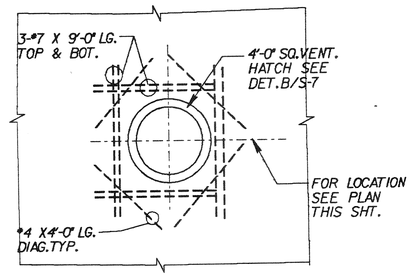

DETAIL B
N.T.S.

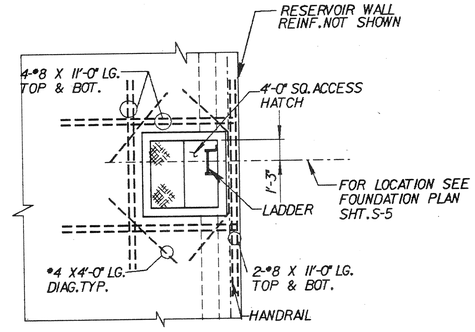

DETAIL A
N.T.S.

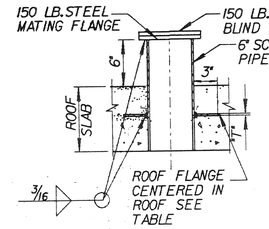

ROOF FLANGE PLATE THICKNESS "T"

PIPE SIZE	STEEL PLATE
30" & UNDER	1/4"
31" TO 60"	5/16"
61" & OVER	3/8"

NOTE:
STEEL PIPE THRU ROOF SHALL BE USED FOR LEVEL SENSOR INSTALLATION

DETAIL C
N.T.S.

REGISTERED PROFESSIONAL ENGINEER — MARK E. FORDHAM — No. — 6-30-88 — STRUCTURAL — STATE OF CALIFORNIA

REV	DATE	BY	DESCRIPTION

SCALE: 1/10 " = 1'-0"

DESIGNED Irma Gonzalez
DRAWN Irma Gonzalez
CHECKED MEFordham

SUBMITTED Kevin O'Brazil PROJECT ENGINEER — C24015 R. C. E. NO. — 5/16/88 DATE
JAMES M. MONTGOMERY CONSULTING ENGINEERS, INC. — 24656 R. C. E. NO. — 5/16/88 DATE

JAMES M. MONTGOMERY CONSULTING ENGINEERS, INC.
P.O. BOX 7009, 250 N. MADISON AVE. PASADENA, CA. 91109-7009

APPROVED Joseph R. Lopez RCE 18642 City Engineer — 5/18/88 DATE
APPROVED _____ DATE

CITY OF SAN FERNANDO
WATER FACILITIES FOR ASSESSMENT DISTRICT NO.-272
ROOF PLAN

SHEET S-6 OF 52 SHEETS

JOB No. 18.0161 FILE No. ZFB3412\J1\S1\SF56.DGN

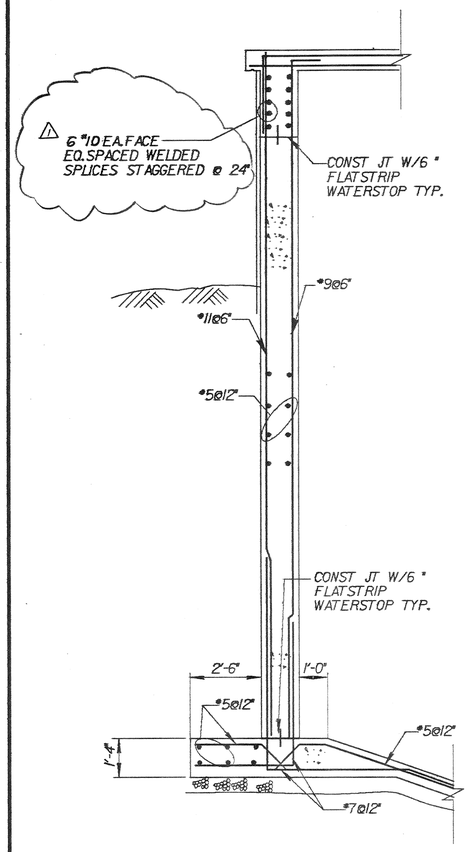

SECTION 9 — S-6

SCALE: 3/8"=1'-0"

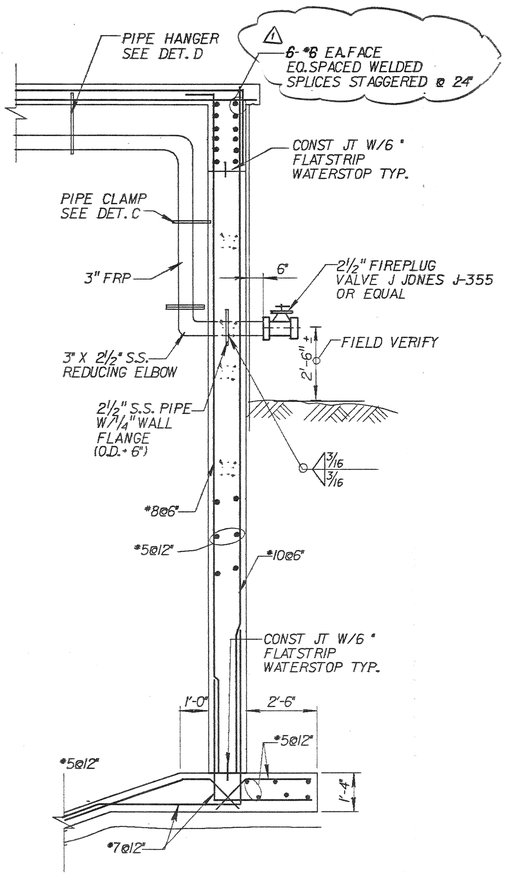

SECTION 10 — S-6

SCALE: 3/8"=1'-0"

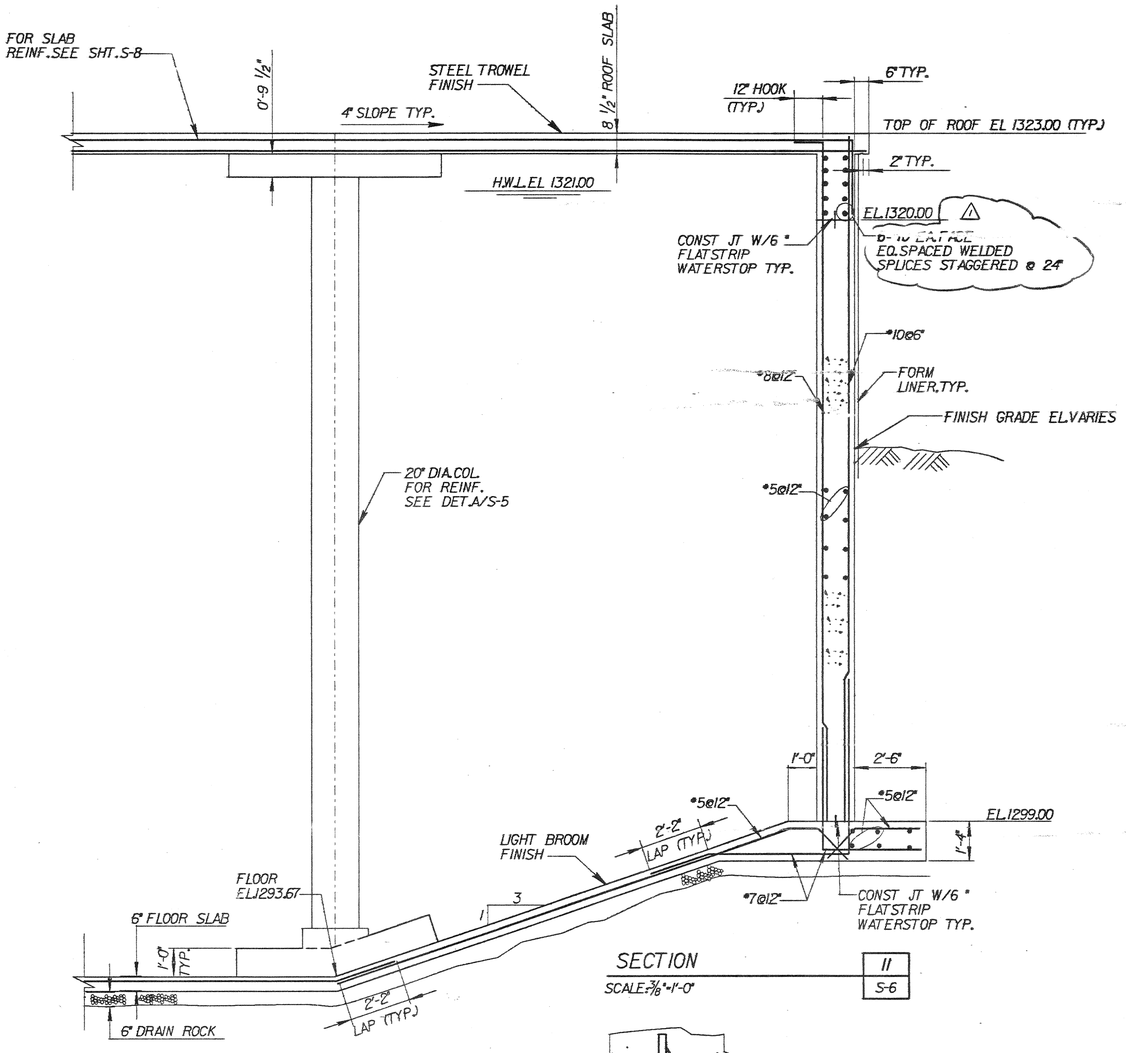

SECTION 11 — S-6

SCALE: 3/8"=1'-0"

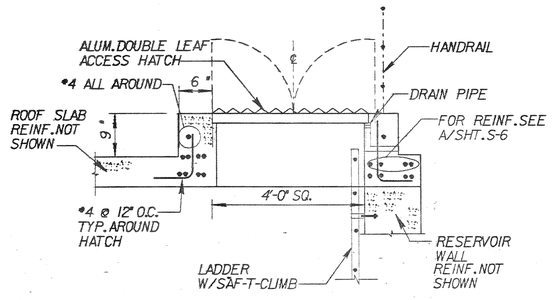

ACCESS HATCH OPENING — A — S-6

N.T.S.

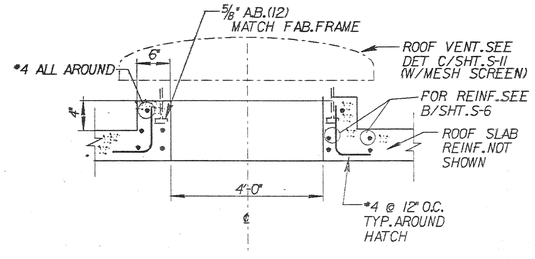

VENTILATION HATCH OPENING — B — S-6

N.T.S.

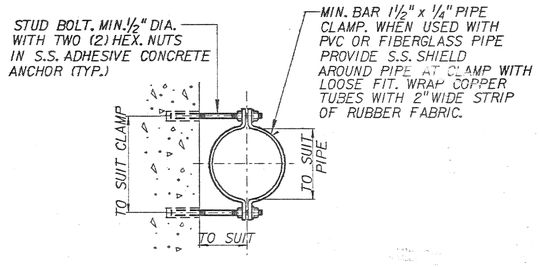

PIPE CLAMP — C — —

N.T.S.

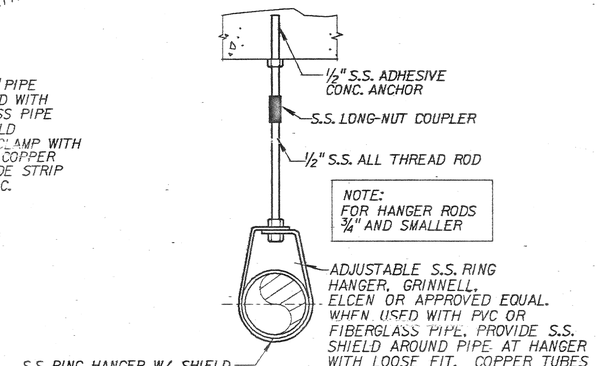

PIPE HANGER — D — —

N.T.S.

REGISTERED PROFESSIONAL ENGINEER — E. FOREMAN — No. 18612 — CIVIL — STATE OF CALIFORNIA
Mark E. Foreman
6-30-88

REV	DATE	BY	DESCRIPTION
1	6/3/88	MEF	REV. PER ADDENDUM #1

SCALE: AS SHOWN

DESIGNED: Anna Cendejas
DRAWN: Anna Cendejas
CHECKED: MEForeman

SUBMITTED: Raul J. Rangel — PROJECT ENGINEER — C24015 R. C. E. NO. — 5/16/88 DATE

JAMES M. MONTGOMERY CONSULTING ENGINEERS, INC. — 24656 R. C. E. NO. — 5/16/88 DATE

JAMES M. MONTGOMERY CONSULTING ENGINEERS, INC.
P.O. BOX 7009, 250 N. MADISON AVE., PASADENA, CA. 91109-7009

JMM

APPROVED: Frank L. Lopez RCE 18642 — City Engineer — 5/18/88 DATE

APPROVED: _____ DATE

CITY OF SAN FERNANDO

WATER FACILITES FOR ASSESSMENT DISTRICT NO.-272

WALL SECTION AND DETAILS

SHEET S-7 OF 52 SHEETS

JOB No. 18.0161 FILE No. ZFB3:12\J3515FS7.DGN

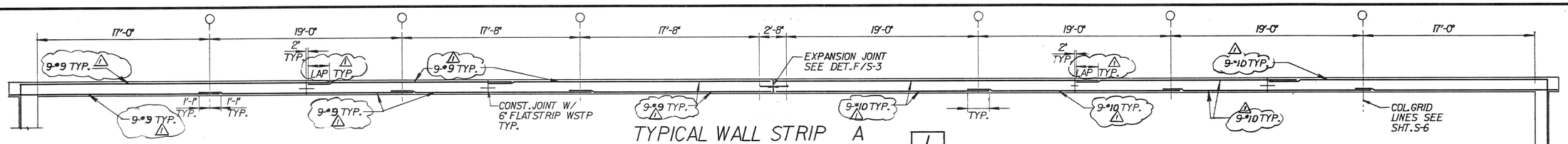

TYPICAL WALL STRIP A

1 / S-6

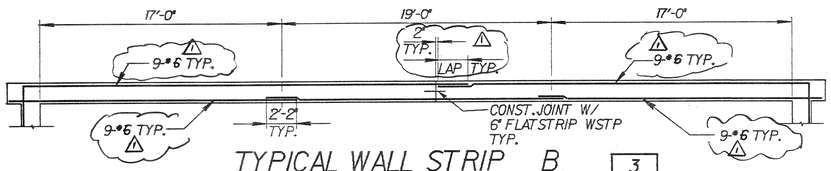

TYPICAL WALL STRIP B

3 / S-6

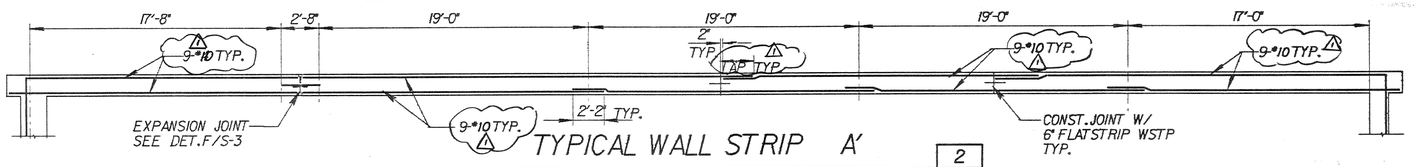

TYPICAL WALL STRIP A'

2 / S-6

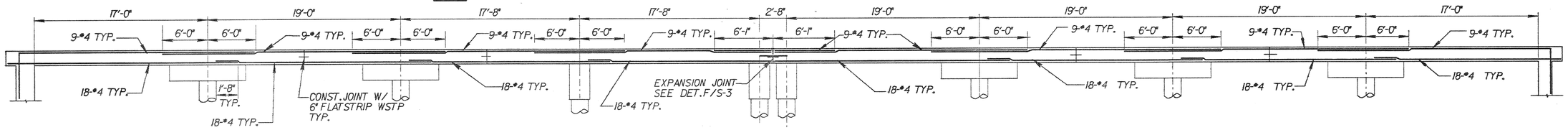

TYPICAL COLUMN STRIP A

4 / S-6

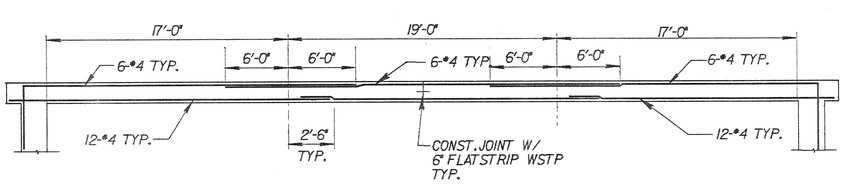

TYPICAL COLUMN STRIP B

5 / S-6

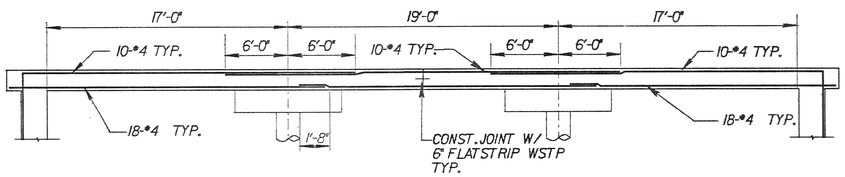

TYPICAL COLUMN STRIP C

6 / S-6

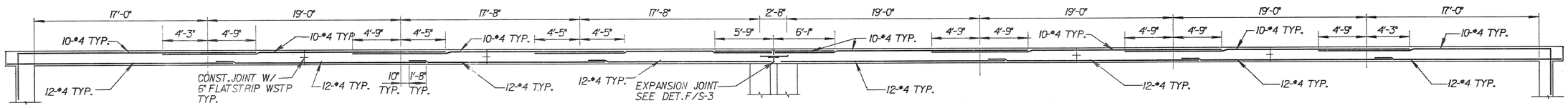

TYPICAL MIDDLE STRIP A

7 / S-6

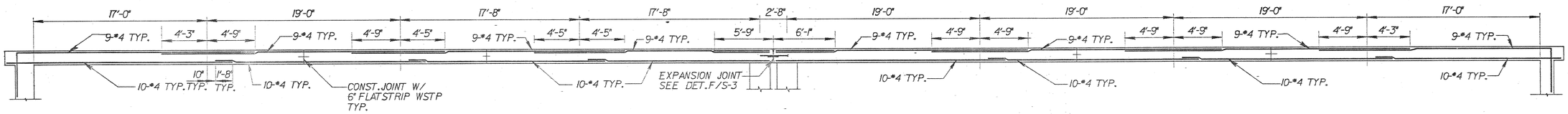

TYPICAL MIDDLE STRIP B

8 / S-6

REGISTERED PROFESSIONAL ENGINEER
Mark S. Fordham
6-30-88
STATE OF CALIFORNIA

REV	DATE	BY	DESCRIPTION
1	6/3/88	MEF	ADDENDUM #1

SCALE: NO SCALE

DESIGNED: [illegible]
DRAWN: [illegible]
CHECKED: M.S. Fordham

SUBMITTED: [illegible] PROJECT ENGINEER — C24015 R. C. E. NO. — 5/16/88 DATE

[illegible] JAMES M. MONTGOMERY CONSULTING ENGINEERS, INC. — 24656 R. C. E. NO. — 5/16/88 DATE

JAMES M. MONTGOMERY CONSULTING ENGINEERS, INC.
P.O. BOX 7009. 250 N. MADISON AVE. PASADENA, CA. 91109-7009

JMME

APPROVED: Joseph R. Lopez RCE 18642, City Engineer — 5/18/88 DATE
APPROVED: _____ DATE

CITY OF SAN FERNANDO
WATER FACILITIES ASSESSMENT DISTRICT NO.-272
ROOF REINFORCEMENT

SHEET S-8 OF 52 SHEETS

JOB No. 18.0161 FILE No. ZFB3:t(12)35)SFSB.DGN

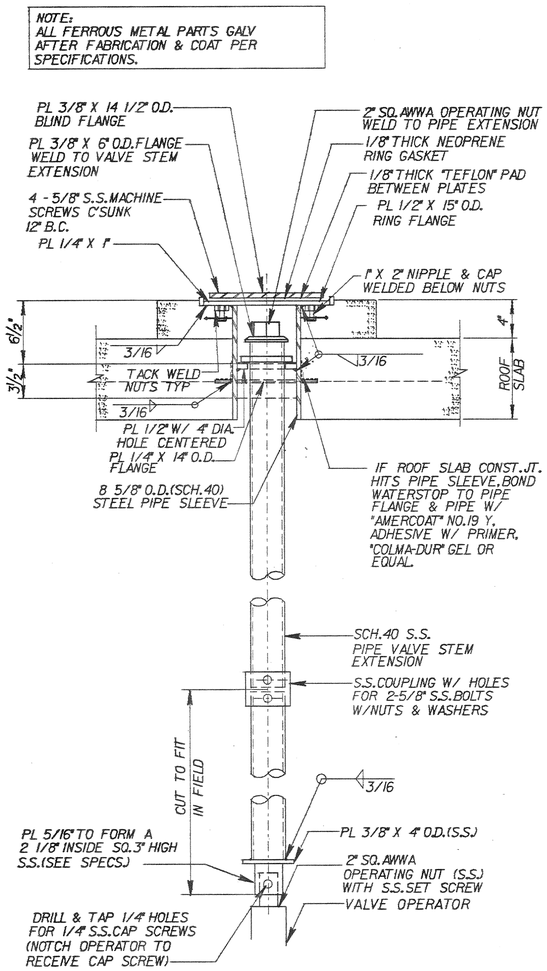

VALVE STEM EXTENSION AND SUPPORT DETAIL — A / VAR

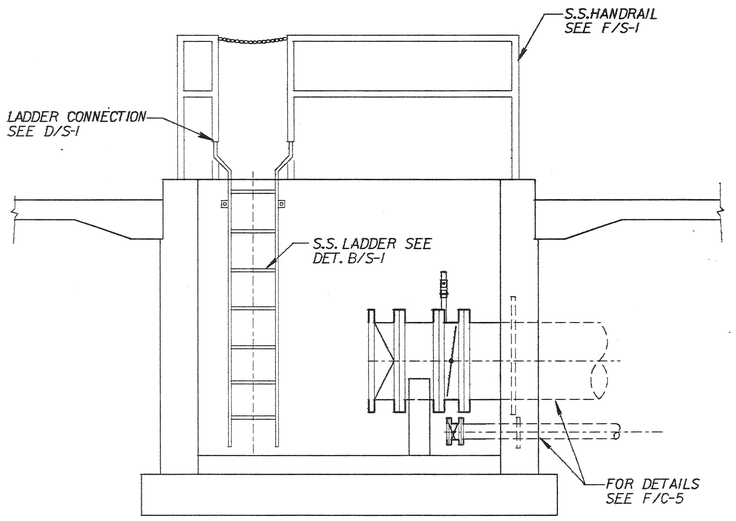

SECTION — 2 / — — SCALE: 1/2"=1'-0"

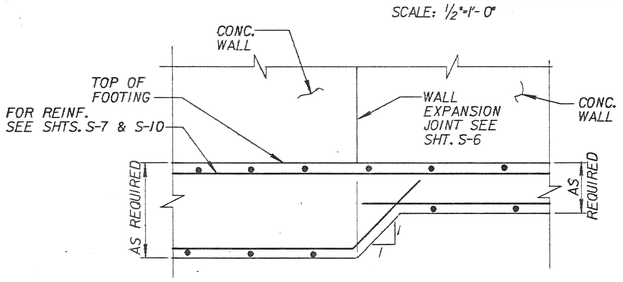

SECTION — 13 / S-5 — SCALE: 1/2"=1'-0"

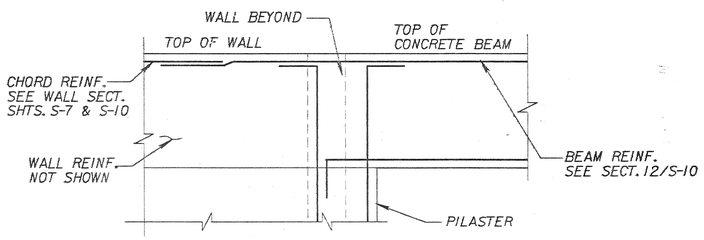

SECTION — 14 / S-6 — SCALE: 1/2"=1'-0"

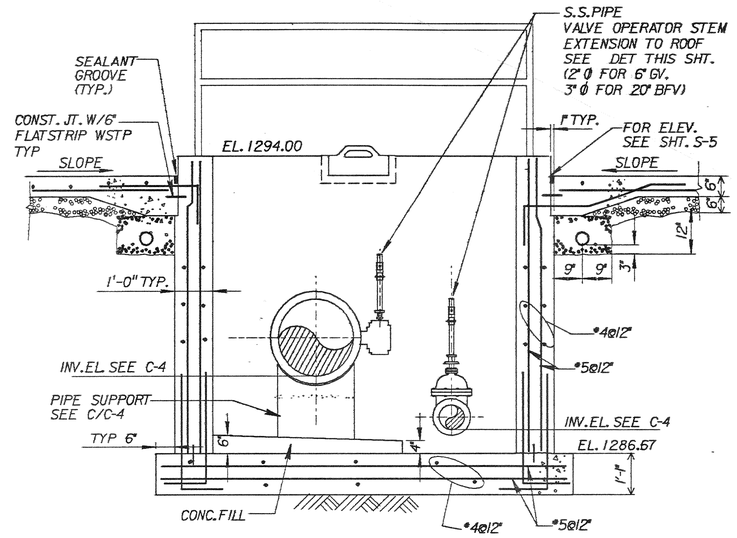

SECTION — 1 / - — SCALE: 1/2"=1'-0"

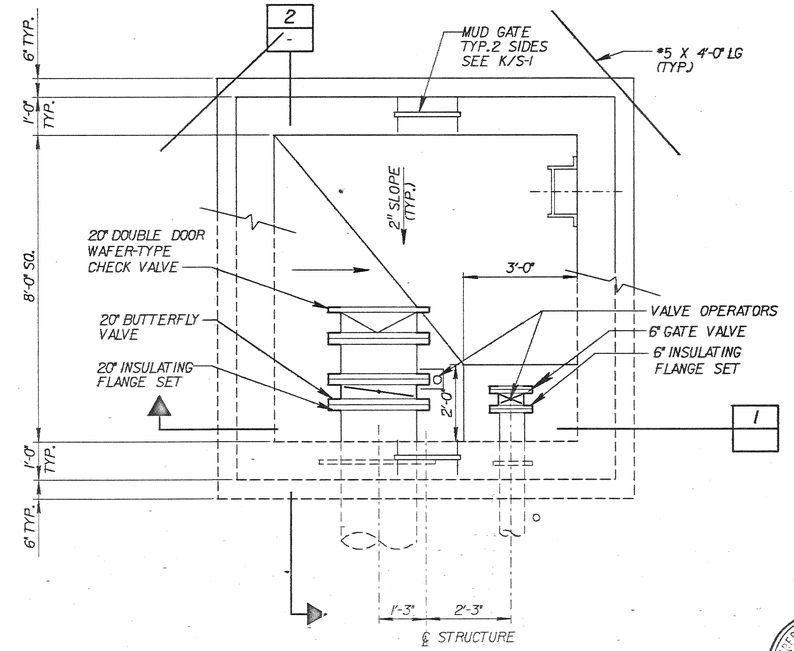

OUTLET SUMP PLAN — A / S-4 — SCALE: 1/2"=1'-0"

REGISTERED PROFESSIONAL ENGINEER — MARK C. FORDHAM — No. 18442 — 6-30-88 — STRUCTURAL — STATE OF CALIFORNIA

REV	DATE	BY	DESCRIPTION

SCALE: AS NOTED

DESIGNED Lorna Gonzalez
DRAWN Lorna Gonzalez
CHECKED MC Fordham

SUBMITTED Samuel J. Brazil, PROJECT ENGINEER — C24015, R. C. E. NO. — 5/16/88, DATE

JAMES M. MONTGOMERY CONSULTING ENGINEERS, INC. — 24656, R. C. E. NO. — 5/16/88, DATE

JAMES M. MONTGOMERY CONSULTING ENGINEERS, INC.
P.O. BOX 7009, 250 N. MADISON AVE., PASADENA, CA. 91109-7009

JMM

APPROVED Joseph R. Lopez RCE 18642, City Engineer — 5/18/88, DATE

APPROVED — DATE

CITY OF SAN FERNANDO
WATER FACILITIES FOR ASSESSMENT DISTRICT NO. D-272
OUTLET SUMP STRUCTURE

SHEET S-9 OF 52 SHEETS

JOB No. 18.0161 FILE No. ZFB3x12\13\5\SF59.DGN

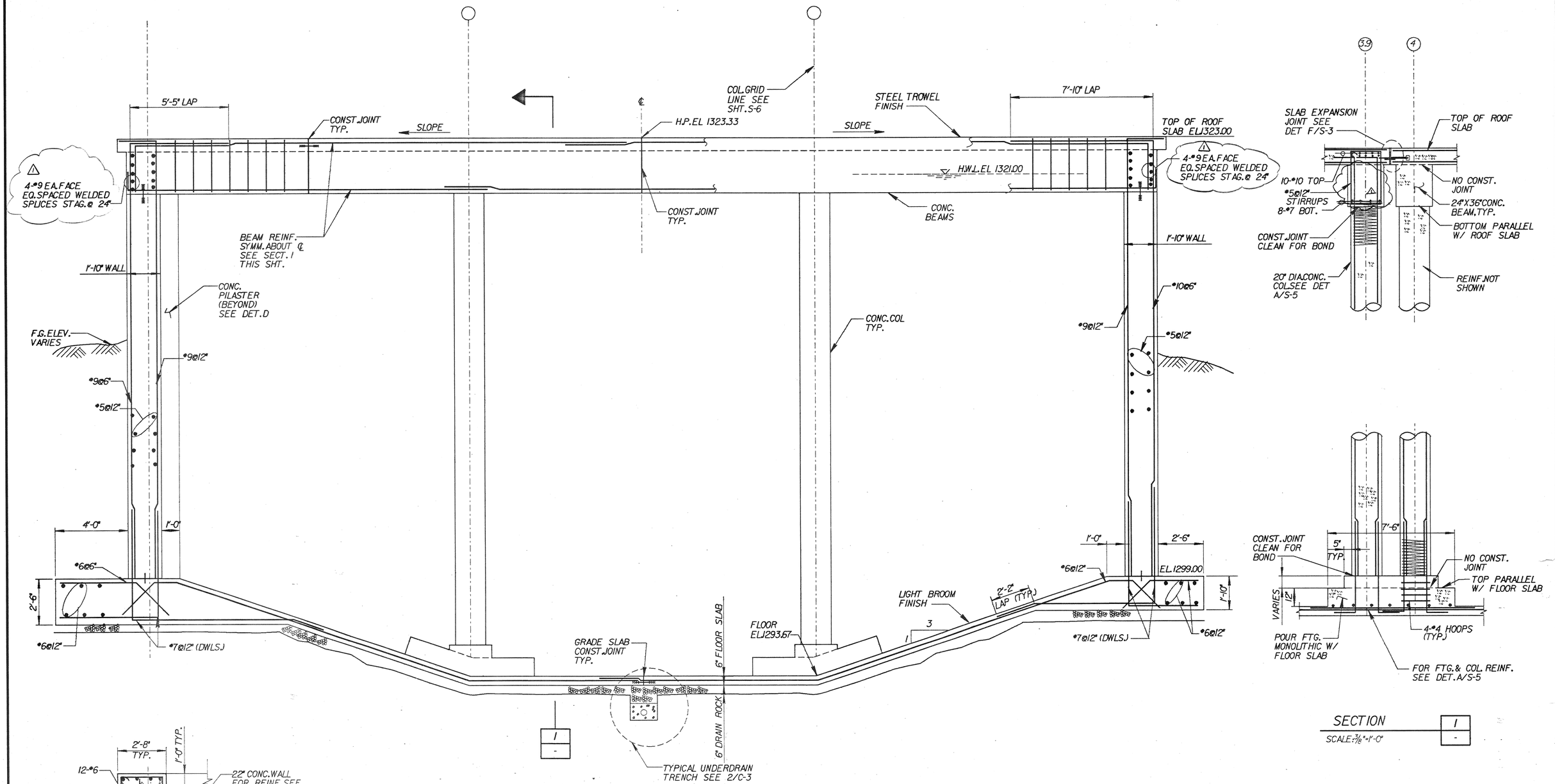

SECTION 1 / -
SCALE: 3/8"=1'-0"

SECTION 12 / S-6
SCALE: 3/8"=1'-0"

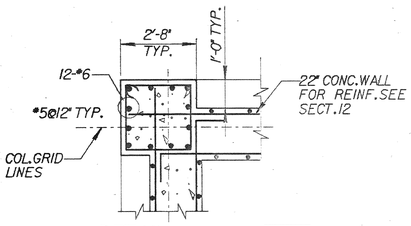

DETAIL D / S-6
N.T.S.

REV	DATE	BY	DESCRIPTION
1	6/3/88	MEF	ADDENDUM # 1

SCALE: AS SHOWN

DESIGNED Anna Gonzalez
DRAWN Anna Gonzalez
CHECKED M.E. Fordham

SUBMITTED
PROJECT ENGINEER — R. C. E. NO. C24015 — DATE 5/16/88
JAMES M. MONTGOMERY CONSULTING ENGINEERS, INC. — R. C. E. NO. 24656 — DATE 5/16/88

JAMES M. MONTGOMERY CONSULTING ENGINEERS, INC.
P.O. BOX 7009, 250 N. MADISON AVE., PASADENA, CA. 91109-7009

APPROVED Joseph R. Lopez RCE 18,642 City Engineer — DATE 5/18/88
APPROVED — DATE

CITY OF SAN FERNANDO
WATER FACILITIES FOR ASSESSMENT DISTRICT NO. D-272
SECTIONS AND DETAILS

SHEET S-10 OF 52 SHEETS

REGISTERED PROFESSIONAL ENGINEER — Mark E. Fordham — 6-30-88 — STRUCTURAL — STATE OF CALIFORNIA

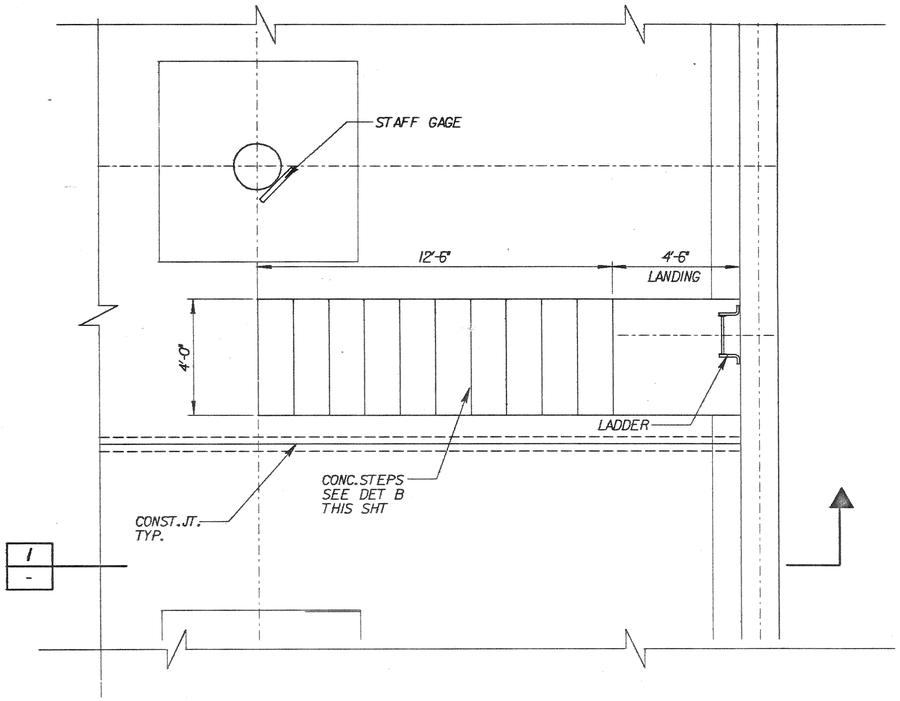

PLAN @ STAIRS

SC. 3/8" = 1'-0"

A | S-5

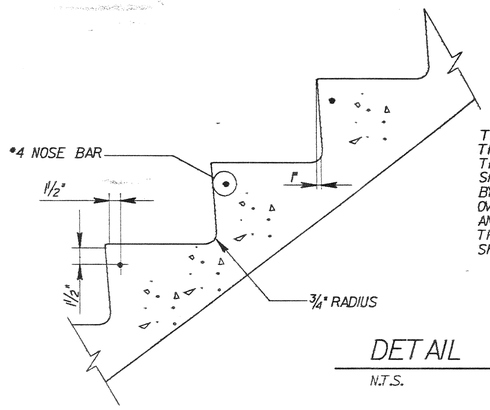

TREAD SHALL RECEIVE A STEEL TROWEL FINISH. IMMEDIATELY THEREAFTER, THE SURFACE SHALL BE SLIGHTLY ROUGHENED BY DRAWING A HAIRBRUSH LIGHTLY OVER THE SURFACE AT A RIGHT ANGLE TO THE DIRECTION OF TRAFFIC TO PRODUCE A NON-SKID SURFACE

DETAIL

N.T.S.

B | -

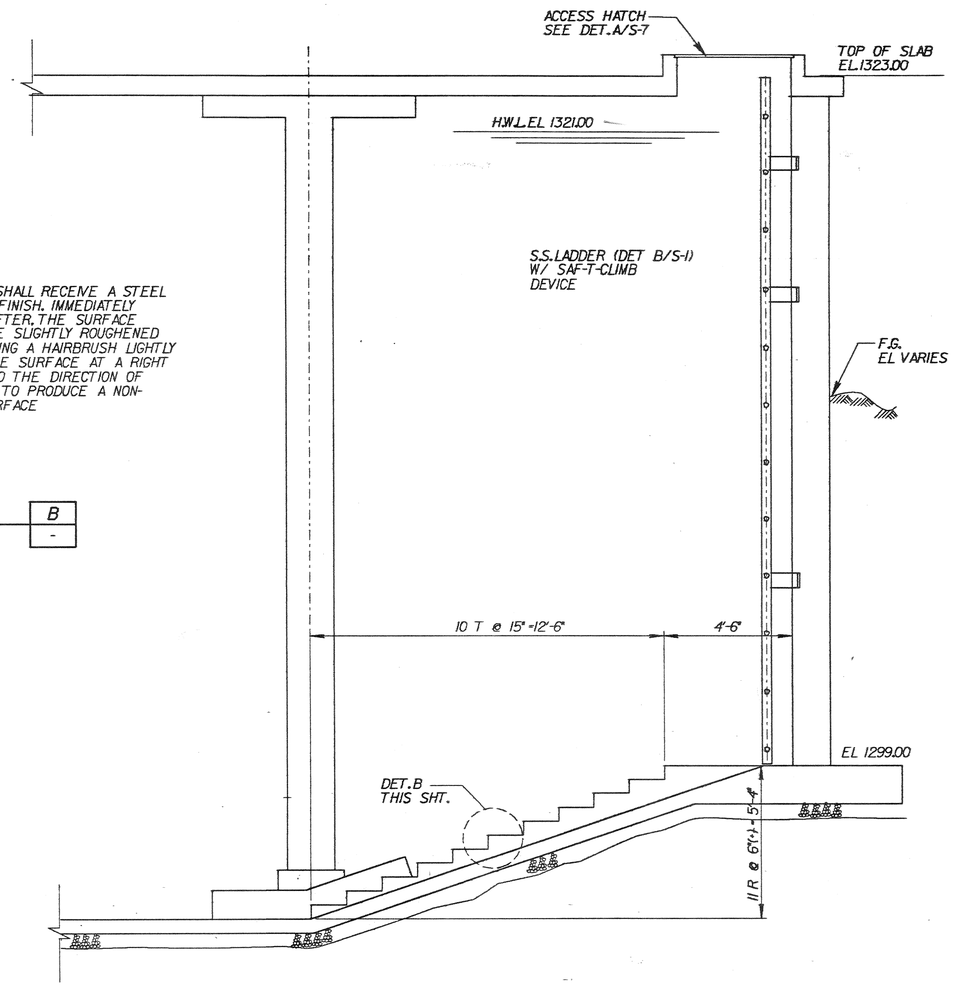

SECTION

SC. 3/8" = 1'-0"

1 | -

NOTES:

1. SPLICES SHALL BE WELDED PER UBC STD. NO 26-8, AWS D12J AND MEET THE REQUIREMENTS OF ACI SECTION 12J5.3.
2. SURFACES DO NOT HAVE TO BE SQUARE CUT. BEVELS CAN BE CUT WITH A TORCH.
3. CHIP OR GRIND ROOT TO SOUND METAL BEFORE WELDING SECOND SIDE.
4. BARS MUST BE PLUMB AND PRECISELY LOCATED IN ORDER TO BE PROPERLY WELDED
5. WRAP BARS WITH AN INSULATING MATERIAL AFTER WELDING IS COMPLETED TO ALOW SLOW COOLING
6. BACKING IS REQUIRED FOR SINGLE - V - GROOVE AND SINGLE - BEEVEL - GROOVE WELDS FOR #8 AND #7 BARS.

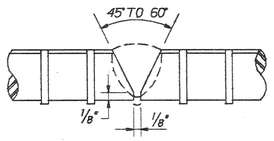

SINGLE - V - GROOVE WELD

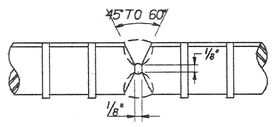

DOUBLE - V - GROOVE WELD

DIRECT BUTT SPLICES FOR HORIZONTAL REINFORCING BARS

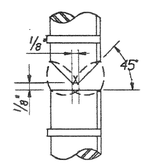

DOUBLE - BEVEL - GROOVE WELD

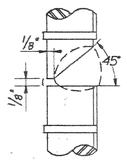

SINGLE - BEVEL - GROOVE WELD

DIRECT BUTT SPLICES FOR VERTICAL REINFORCING BARS

WELDED SPLICES FOR REINFORCING BARS #7 AND LARGER

NOT TO SCALE

D | S-7,10

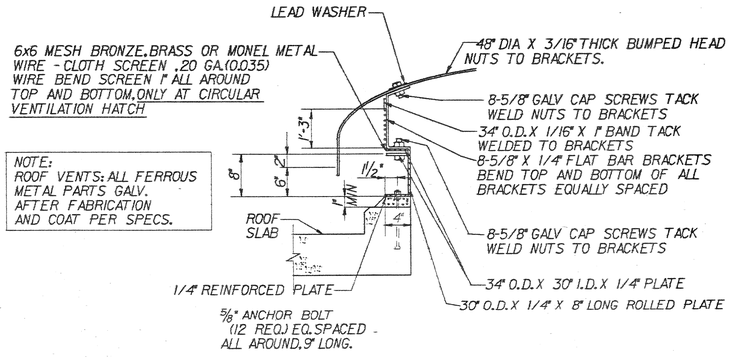

NOTE:
ROOF VENTS: ALL FERROUS METAL PARTS GALV. AFTER FABRICATION AND COAT PER SPECS.

ROOF VENT. DETAIL

N.T.S.

C | S-7

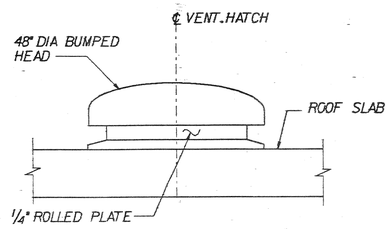

ELEVATION

REGISTERED PROFESSIONAL ENGINEER — M. E. FORTHMAN — No. 52656 — 6-30-88 — STRUCTURAL — STATE OF CALIFORNIA

REV	DATE	BY	DESCRIPTION

SCALE: AS SHOWN

DESIGNED: Ima Fonsely
DRAWN: Ima Fonsely
CHECKED: M. E. Forthman

SUBMITTED: PROJECT ENGINEER — C24015 R. C. E. NO. — 5/16/88 DATE

JAMES M. MONTGOMERY CONSULTING ENGINEERS, INC. — 24656 R. C. E. NO. — 5/16/88 DATE

JAMES M. MONTGOMERY CONSULTING ENGINEERS, INC.
P.O. BOX 7009, 250 N. MADISON AVE., PASADENA, CA. 91109-7009

APPROVED: Joseph R. Lopez RCE 18642, City Engineer — 5/18/88 DATE

APPROVED: _____ DATE

CITY OF SAN FERNANDO
WATER FACILITIES FOR ASSESSMENT DISTRICT NO. D-272
RESERVOIR ACCESS

SHEET S-11 OF 52 SHEETS

JOB No. 18.0161 FILE No. 2F18.5d(2).3b.1sf SHEET NO.

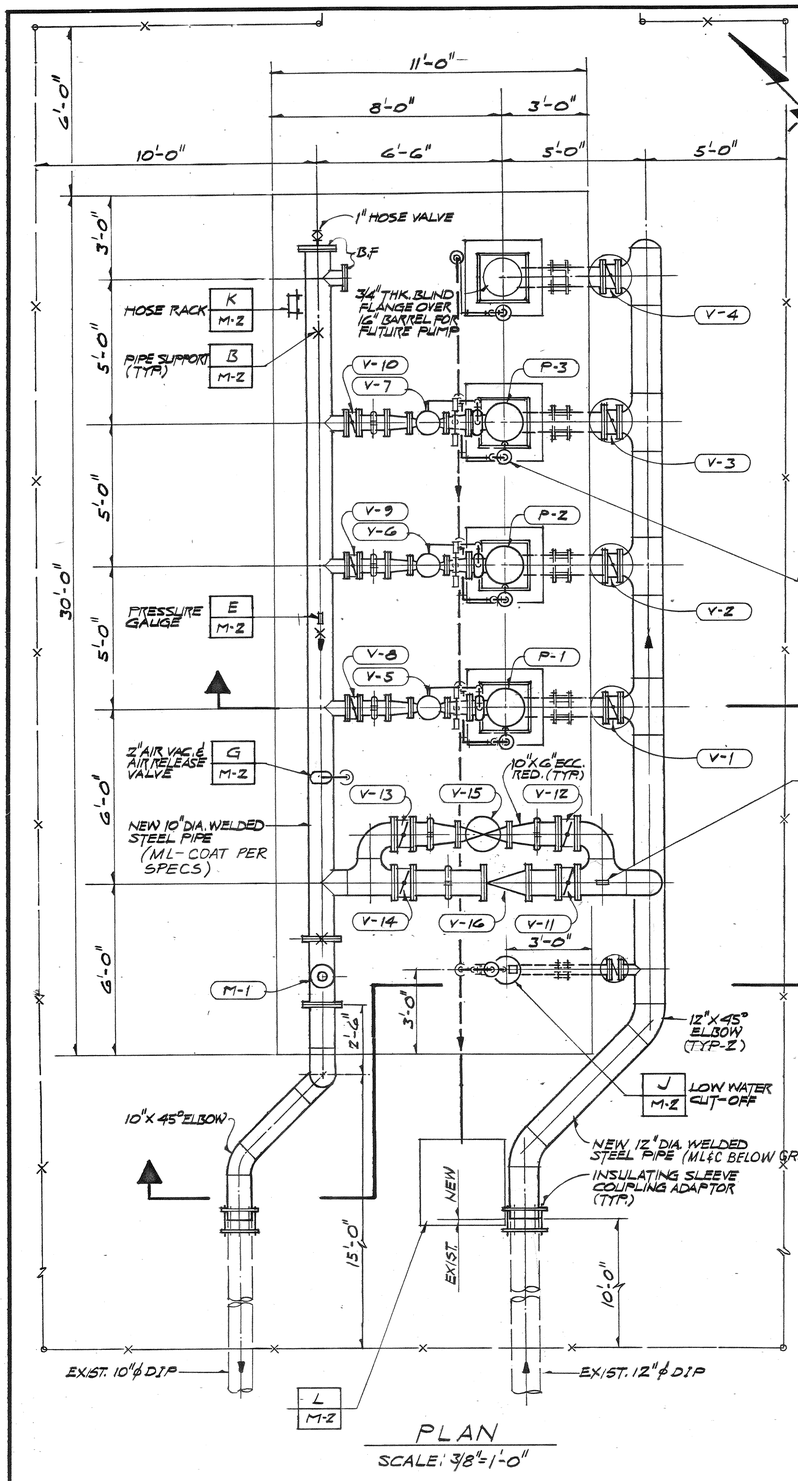

PLAN

SCALE: 3/8"=1'-0"

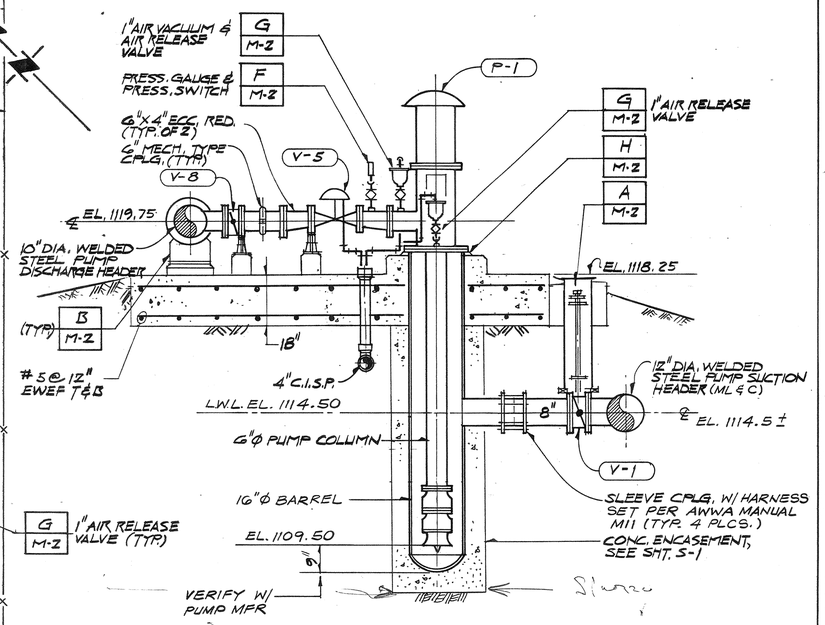

SECTION 1 —

SCALE: 1/2"=1'-0"

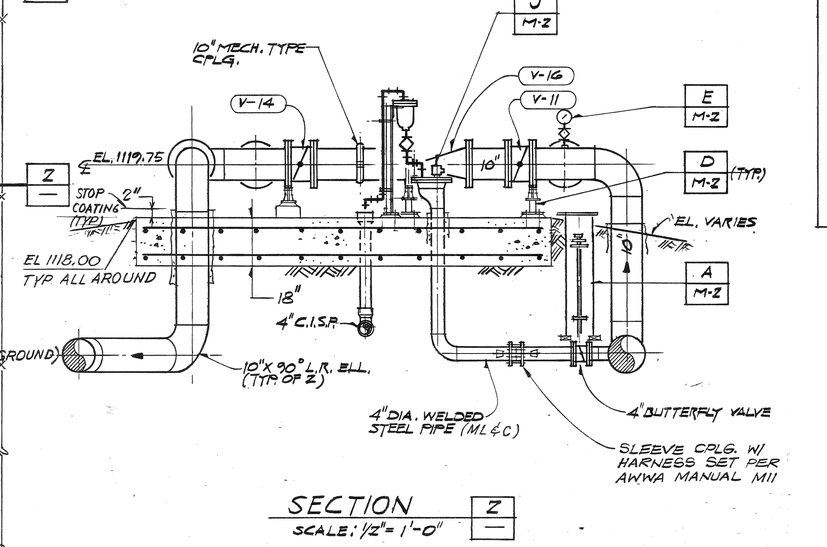

SECTION Z —

SCALE: 1/2"= 1'-0"

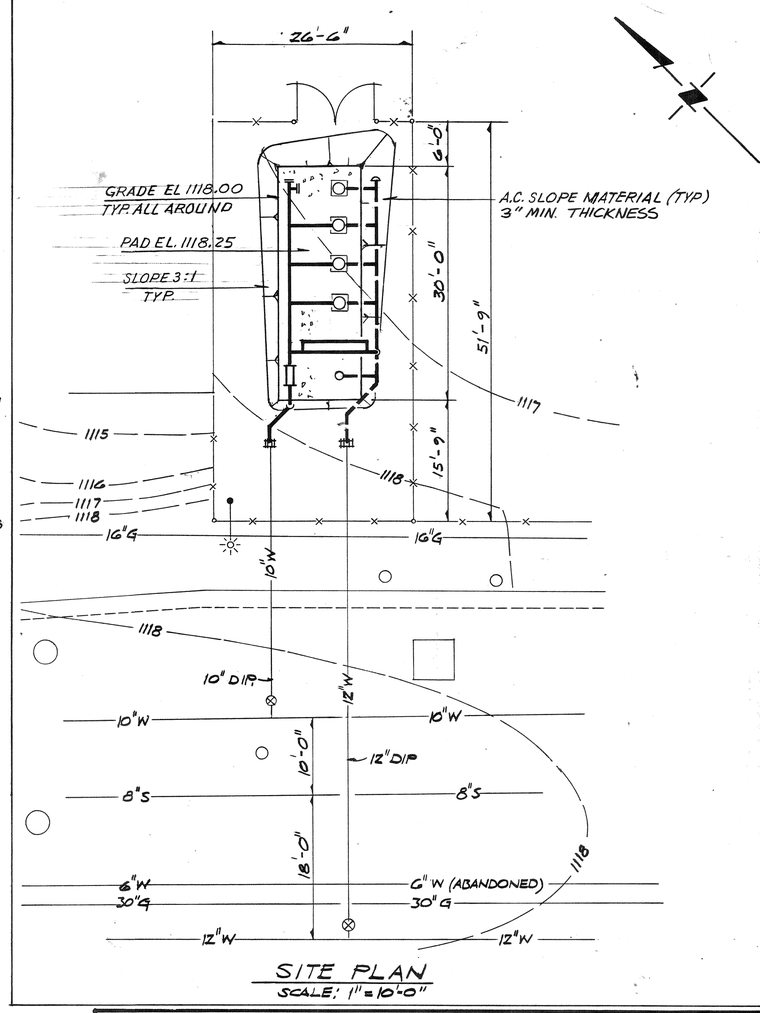

SITE PLAN

SCALE: 1" = 10'-0"

EQUIPMENT SCHEDULE

EQUIPMENT NO.	EQUIPMENT	DESCRIPTION	REMARKS
P-1 THRU P-3	VERTICAL TURBINE PUMP	500 GPM AT 67 FT. TDH 15 HP, 2-STAGE	AURORA MODEL NO 10 RL . . OR EQUAL
V-1 THRU V-4	BUTTERFLY VALVE	8-INCH FLGD. 150 FT. OPERATING HEAD	BURIED W/2-INCH SQ. NUT & EXTENSION OPERATOR
V-5 THRU V-7	PUMP CONTROL VALVE	800 GPM MAX., C.I. 4-INCH FLGD. CLASS 125	CLAVAL MOD. 60-11 OR EQUAL
V-8 THRU V-10	BUTTERFLY VALVE	6-INCH FLGD. 250 FT. OPERATING HEAD	WORMGEAR OPERATOR W/HANDWHEEL
V-11 THRU V-14	BUTTERFLY VALVE	10-INCH FLGD. 250 FT. OPERATING HEAD	WORM-GEAR OPERATOR W/HANDWHEEL
V-15	PRESSURE REDUCING & SUSTAINING VALVE	1200 GPM MAX., C.I. 6-INCH FLGD. CLASS 125	CLAVAL MOD. 92-01 OR EQUAL - ADJUST SETTINGS IN FIELD
V-16	SWING CHECK VALVE	10-INCH FLGD.	W/COUNTERWEIGHT
M-1	PROPELLER METER	1600 GPM MAX 10-INCH FLGD. STEEL	W/STRAIGHTENING VANES

Exp. 6-30-88

REV	DATE	BY	DESCRIPTION

SCALE: AS NOTED

DESIGNED: [signature]
DRAWN: Remigio L. Lanza
CHECKED: [signature]

SUBMITTED: [signature] PROJECT ENGINEER — C24015 R.C.E. NO. — DATE

RECOMMENDED: [signature] JAMES M. MONTGOMERY CONSULTING ENGINEERS, INC. — 24656 R.C.E. NO. — 4/27/88 DATE

JAMES M. MONTGOMERY CONSULTING ENGINEERS, INC.

P.O. BOX 7009, 250 N. MADISON AVE., PASADENA, CA 91109-7009

APPROVED: [signature] Joseph D. Lopez, RCE 18642, City Engineer — 5/18/88 DATE

APPROVED: _____ DATE

CITY OF SAN FERNANDO

WATER FACILITIES FOR ASSESSMENT DISTRICT No. D-272

BOOSTER PUMP STATION
SITE PLAN, PLAN & SECTIONS

SHEET M-1 OF 52 SHEETS

JOB NO. ____ FILE ____ CC ____

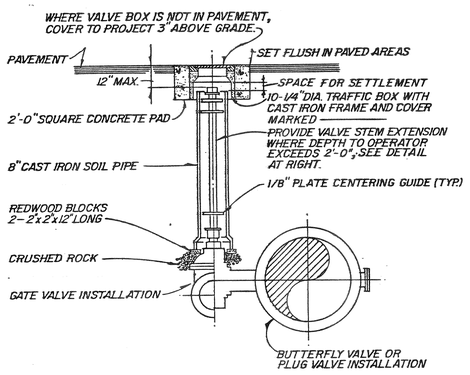

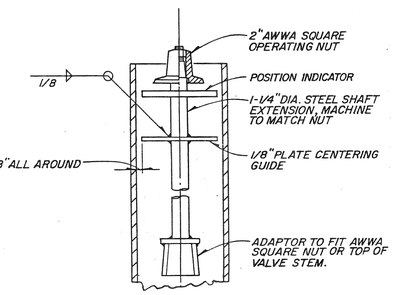

NOTE:
FOR LUBRICATED PLUG VALVE, EXTEND LUBRICATION LINE TO GRADE PER MANUFACTURER'S INSTRUCTIONS.

BURIED VALVE — A / M-1

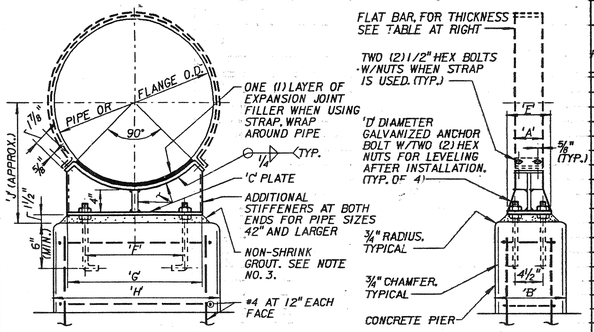

NOMINAL PIPE SIZE	'A'	'B'	'C'	'D'	'E'	FLAT BAR	SUPPORTING PIPE 'F'	PIPE 'G'	PIPE 'H'	PIPE 'J'	FLANGE 'F'	FLANGE 'G'	FLANGE 'H'	FLANGE 'J'
6	4	12	3/8	5/8	6	1/4	4 1/2	8	14	10	6 1/2	11	16	13
8	4	12	3/8	5/8	6	1/4	5	9 1/2	14	11	7 1/2	13	18	14
10	4	12	3/8	5/8	6	1/4	6	11	16	12	9	15	20	15
12	4	12	3/8	5/8	6	1/4	7	13	18	13	10	17	22	16
14	4	12	3/8	5/8	6	1/4	8	13	18	14	11	18	23	17
16	4	12	3/8	5/8	6	1/4	9	15	21	15	12	20	26	18
18	4	12	3/8	5/8	6	1/4	10	16	22	16	13	21	26	19
20	5	12	3/8	5/8	6	3/8	10	18	24	17	15	23	28	21
22	5	12	3/8	5/8	6	3/8	12	19	24	18	16	25	30	22
24	5	12	3/8	5/8	6	3/8	13	21	26	19	16	26	32	23
26	5	12	3/8	3/4	6	3/8	14	22	28	20	18	28	34	24
30	5	12	3/8	3/4	6	3/8	16	25	30	22	20	31	36	26
34	5	15	3/8	3/4	6	3/8	18	28	33	24	22	35	41	29
36	6	15	3/8	3/4	6	3/8	19	29	34	25	24	36	42	30
42	6	18	1/2	1	8	3/8	21	33	39	28	27	41	47	33
48	6	18	1/2	1	8	3/8	24	38	44	31	30	46	52	37
54	6	18	1/2	1	8	3/8	28	42	48	34	34	50	56	40
60	6	18	1/2	1 1/8	8	3/8	32	46	52	37	36	56	62	44
66	6	18	1/2	1 1/8	8	3/8	33	51	58	40	40	61	68	47
72	6	18	1/2	1 1/8	8	3/8	36	55	62	43	44	65	72	50

NOTES:
1. WHEN SUPPORTING PIPE AND FLANGE ALTERNATELY ON THE SAME LINE, CONCRETE PIERS FOR PIPE SUPPORTS SHALL ALL HAVE THE SAME DIMENSION 'H' FOR FLANGE SUPPORT.
2. PIPE SUPPORTS TO BE LOCATED IN PLAN AT POINTS MARKED THUS: (X)
3. WHERE DIFFERENTIAL SETTLEMENT IS LIKELY TO OCCUR, OMIT GROUT AS DIRECTED BY THE ENGINEER.
4. GALVANIZE AFTER FABRICATION.

PIPE SUPPORT WITH OR WITHOUT STRAP — B / M-1

NOTES:
1. FOR ALL PRESSURE CONNECTIONS TO AND FROM PUMPS AND OTHER EQUIPMENT, PROVIDE HARNESS SETS UNLESS OTHERWISE SHOWN.
2. FOR LINING AND COATING SEE SPECIFICATIONS, SECTION 15000

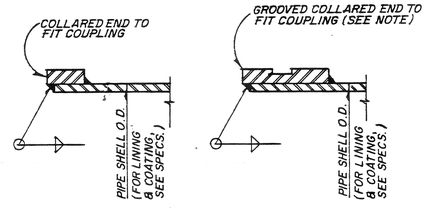

COLLARED END DETAILS FOR MECHANICAL COUPLINGS — C / M-1

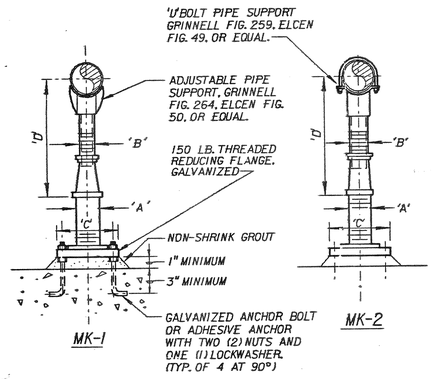

ADJUSTABLE PIPE SUPPORT APPROXIMATE DIMENSIONS IN INCHES					
PIPE SIZE	'A'	'B'	'C'	'D' MINIMUM	'D' MAXIMUM
2-1/2	2-1/2	1-1/2	9	8	11-1/2
3	2-1/2	1-1/2	9	8-1/4	11-3/4
3-1/2	2-1/2	1-1/2	9	8-1/2	12
4	3	*2-1/2	9	10-1/4	14
6	3	*2-1/2	9	11-5/8	15-1/4
8	3	*2-1/2	9	13-5/8	16-1/2
0	3	*2-1/2	9	14-5/8	18-1/4
12	3	*2-1/2	9	15-5/8	19-3/4
14	4	3	11	18-7/8	20-3/4
16	4	3	11	19-7/8	22-1/4
18	6	3-1/2	13-1/2	21-1/4	24
20	6	3-1/2	13-1/2	23-1/4	25-1/2
24	6	4	13-1/2	26-1/2	28-1/4
30	6	4	13-1/2	29-5/8	31-1/2
32	6	4	13-1/2	30-5/8	32-3/4
36	6	4	13-1/2	32-5/8	34-3/4

*SEE MFR.

ADJUSTABLE PIPE SUPPORT WITH OR WITHOUT 'U' BOLT — D / M-1 — REV. 091587

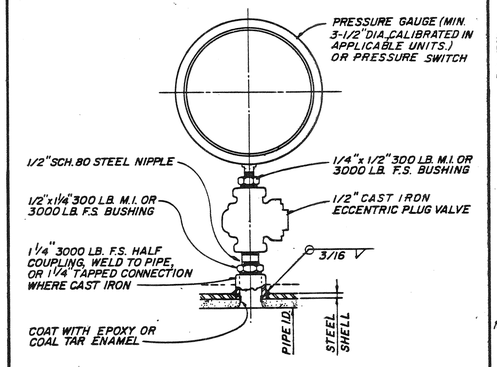

PRESSURE GAUGE OR PRESSURE SWITCH — E / M-1

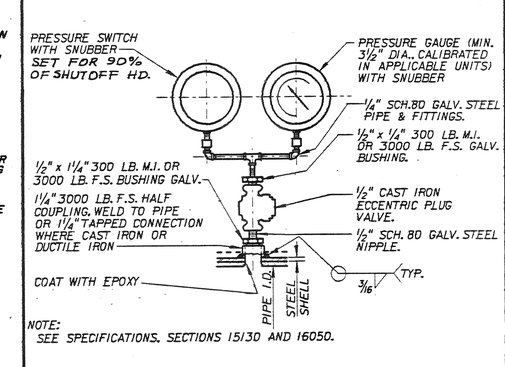

NOTE:
SEE SPECIFICATIONS, SECTIONS 15130 AND 16050.

PRESSURE GAUGE AND PRESSURE SWITCH — F / M-1 — REV. 091587

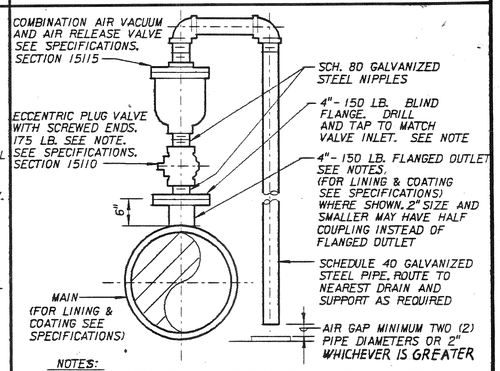

NOTES:
1. FOR MAIN PRESSURE OF MORE THAN 150 LBS., FLANGED OUTLET AND ECCENTRIC PLUG VALVE SHOULD SUIT HIGHER PRESSURE.
2. FOR 1" AIR VALVE, USE 2" - 3000 LBS. HALF CPLG. W/2"x1" RED. BUSHING.

AIR-VACUUM AND AIR-RELEASE VALVE ASSEMBLY 3" AND SMALLER — G / M-1

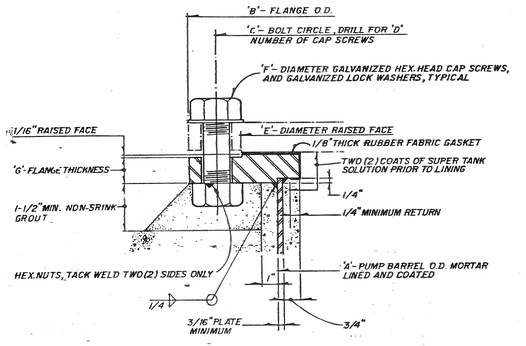

DIMENSIONS IN INCHES							
'A'	'B'	'C'	'D'	'E'	'F'	'G'
14	21	18-3/4	12	16-1/4	1	1-3/8
16	23-1/2	21-1/4	16	18-1/2	1	1-7/16
18	25	22-3/4	16	21	1-1/8	1-9/16
20	27-1/2	25	20	23	1-1/8	1-11/16
22	29-1/2	27-1/4	20	25-1/4	1-1/4	1-13/16
24	32	29-1/2	20	27-1/4	1-1/4	1-7/8
26	34-1/4	31-3/4	24	29-1/4	1-1/4	2
28	36-1/2	34	28	31-1/4	1-1/4	2-1/16
30	38-3/4	36	28	33-3/4	1-1/4	2-1/8
32	41-3/4	38-1/2	28	35-3/4	1-1/2	2-1/4
34	43-3/4	40-1/2	32	37-3/4	1-1/2	2-5/16
36	46	42-3/4	32	40-1/4	1-1/2	2-3/8

PUMP BARREL FLANGE — H / M-1

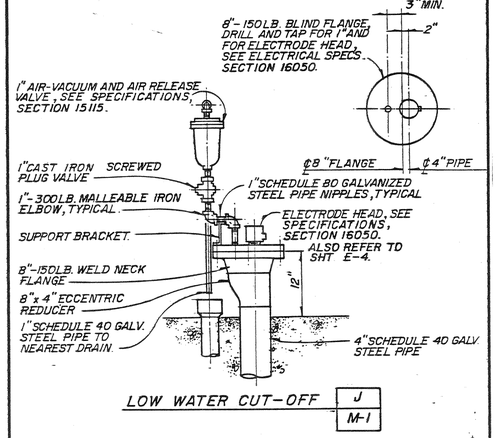

LOW WATER CUT-OFF — J / M-1

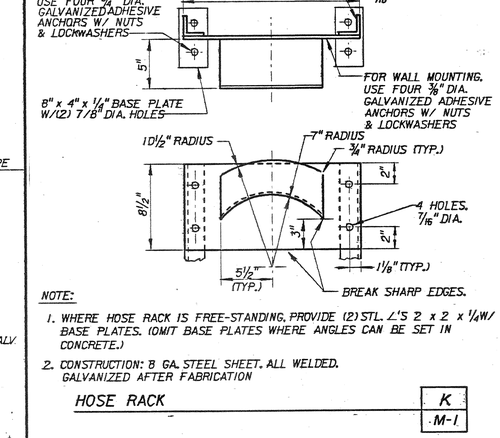

NOTE:
1. WHERE HOSE RACK IS FREE-STANDING, PROVIDE (2) STL. ∠'S 2 x 2 x 1/4 W/ BASE PLATES. (OMIT BASE PLATES WHERE ANGLES CAN BE SET IN CONCRETE.)
2. CONSTRUCTION: 8 GA. STEEL SHEET. ALL WELDED. GALVANIZED AFTER FABRICATION

HOSE RACK — K / M-1

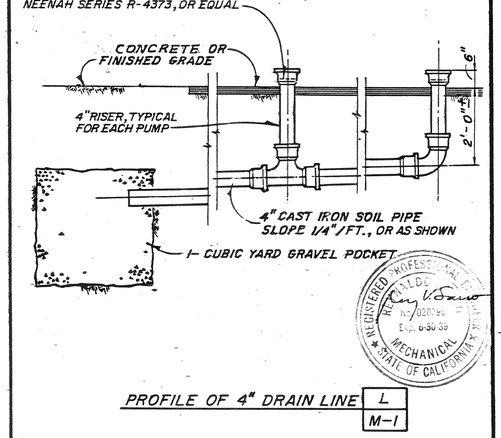

REGISTERED PROFESSIONAL ENGINEER — RICHARD L. DE LONGE — No. M 020750 — EXP. 6-30-88 — MECHANICAL — STATE OF CALIFORNIA

PROFILE OF 4" DRAIN LINE — L / M-1

REV	DATE	BY	DESCRIPTION

SCALE:

DESIGNED R. L. Longe
DRAWN P. DIDONATO
CHECKED Rey Sano

SUBMITTED — PROJECT ENGINEER — C24015 R.C.E. NO. — DATE
RECOMMENDED — JAMES M. MONTGOMERY CONSULTING ENGINEERS, INC. — 24656 R.C.E. NO. — 4/27/88 DATE

JAMES M. MONTGOMERY CONSULTING ENGINEERS, INC.
P.O. BOX 7009, 250 N. MADISON AVE., PASADENA, CA 91109-7009

APPROVED — Joseph R. Longe RCE 18642, City Engineer — 5/18/88 DATE
APPROVED — DATE

CITY OF SAN FERNANDO
WATER FACILITIES FOR ASSESSMENT DISTRICT No. D-272
MECHANICAL STANDARD DETAILS

SHEET M-2 OF 52 SHEETS

JOB NO. FILE CC

120/240 VOLTS MAIN	1 Φ 3 W	PANELBOARD A LOCATION RESERVOIR AREA									FEED MTG IN MCC		
LOAD DESCRIPTION	WATTAGE Φ A	WATTAGE Φ B	LTG	REC	MISC	CKT NUM		CKT NUM	MISC	REC	LTG	WATTAGE Φ A	WATTAGE Φ B	LOAD DESCRIPTION
LIGHTS	600		4			1		2	1			150		MCC SPACE HTR.
FLOODLIGHTS		600	2			3		4	1				200	MCC-RECEPT.
PORTABLE EXH. FAN RECEP	675		1			5		6				500		TELEMETRY
PORTABLE EXH. FAN RECEP		675	1			7		8					300	CONTROL POWER
SPACE						9		10						SPACE
						11		12						
						13		14						
						15		16						
	1275	1275				TOTAL		TOTAL				500		
	TOTAL		TOTAL LOAD											
	1925	1775	8.7 KVA (15.5 AMPS)											

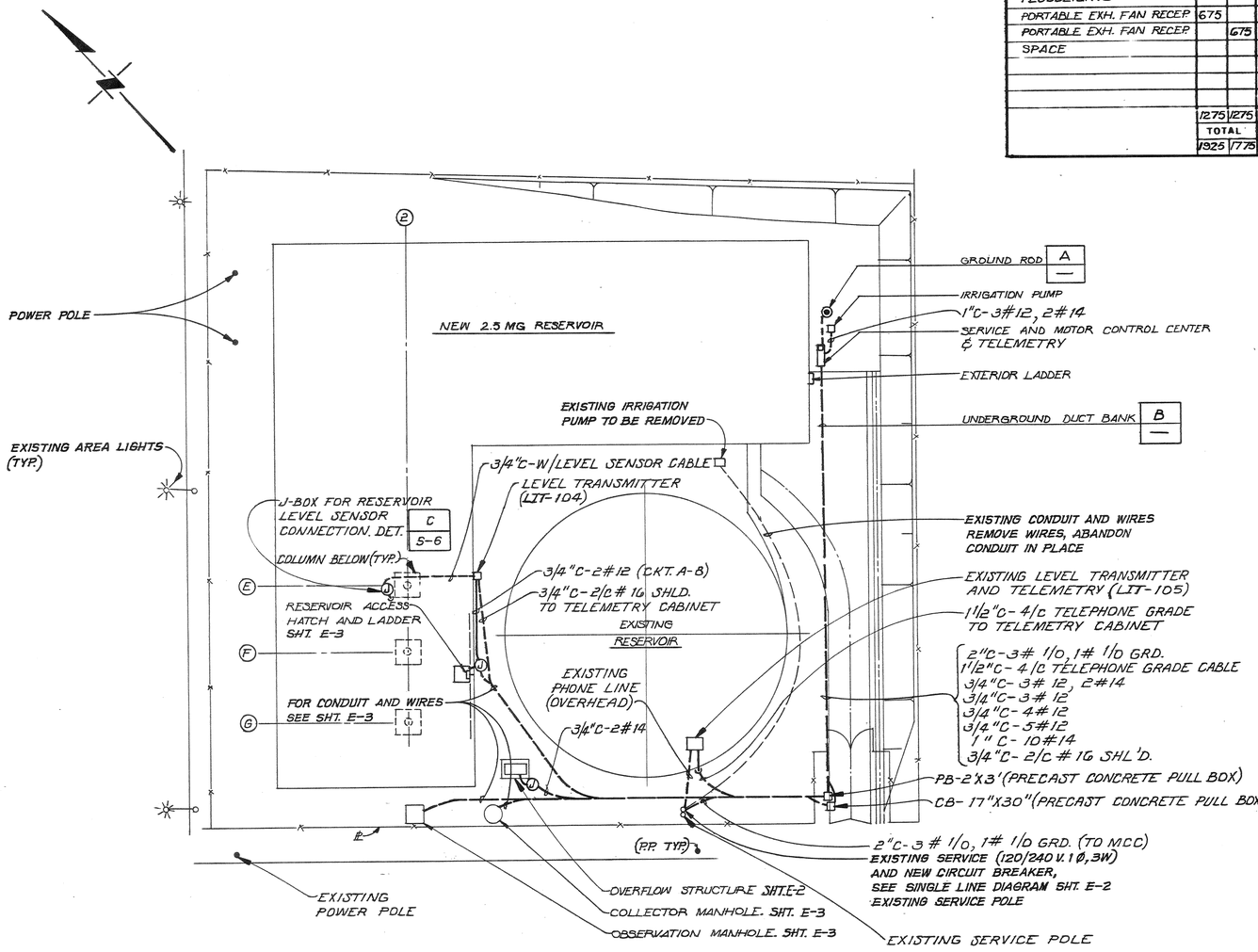

PLOT PLAN
1"=20'-0"

GENERAL NOTES

THE CONTRACTOR SHALL VERIFY EXACT LOCATION OF TERMINAL BOXES AND CONDUIT ENTRANCES OF ALL EQUIPMENT AGAINST SHOP DRAWINGS BEFORE STUBBING UP CONDUITS.

CONDUIT FOR FUTURE EQUIPMENT OR EXTENSION SHALL BE TERMINATED AS SHOWN IN DETAIL OR AS SPECIFIED.

CONNECTION BETWEEN RIGID CONDUIT AND MOTOR TERMINAL BOX SHALL BE LIQUID-TIGHT.

EXPOSED FLEXIBLE CONNECTION SHALL BE FLEXIBLE LIQUID-TIGHT CONDUIT WITH APPROVED GROUNDING TYPE FITTINGS AND SHALL NOT EXCEED 30" IN LENGTH FOR 2" SIZE AND LARGER. MAXIMUM OF 18" FOR SIZES 1 1/2" AND SMALLER.

CONDUITS TERMINATING AT SWITCHBOARD, MOTOR CONTROL CENTER, POWER PANELS, CONTROL CABINETS, ETC., SHALL BE EQUIPPED WITH A GROUNDING BUSHING 'OZ' TYPE 'GB' AND GROUNDED AS A BANK WITH NO. 6 GROUND WIRE.

MOTOR CONTROL CENTER AND ALL FREE STANDING PANELS SHALL BE SET ON CONCRETE PAD AND LEVELING CHANNELS EMBEDDED IN PAD AS SHOWN UNLESS OTHERWISE INDICATED.

IN CASE OF INTERFERENCE BETWEEN ELECTRICAL EQUIPMENT SHOWN ON THE DRAWINGS AND OTHER EQUIPMENT, THE CONTRACTOR SHALL NOTIFY THE ENGINEER, IN WRITING, AND THE ENGINEER SHALL REVIEW THE PROPOSED CHANGES BEFORE THEY ARE MADE.

ALL OUTDOOR DEVICES SHALL BE WEATHERPROOF.

LOCATION OF PULLBOXES ARE APPROXIMATE. CONTRACTOR SHALL COORDINATE EXACT LOCATION OF PULLBOXES WITH MECHANICAL PIPING AND SHALL BE AWAY FROM FLOW LINES.

ONLY MAJOR PULLBOXES FOR UNDERGROUND RUNS ARE SHOWN. CONTRACTOR SHALL PROVIDE ADDITIONAL PULLBOXES WHERE THEY ARE REQUIRED TO MAKE A WORKABLE INSTALLATION.

ALL EXTERIOR RECEPTACLES SHALL BE EQUIPPED WITH GROUND FAULT INTERRUPTERS.

SYMBOLS

- EXPOSED CONDUIT.
- CONDUIT CONCEALED ABOVE FLOOR.
- CONDUIT RUN UNDERGROUND OR IN CONCRETE.
- EXPOSED CONDUIT RUN BEHIND OBSTRUCTION
- BARE COPPER GROUND WIRE IN GROUND OR SLAB. SIZE AS NOTED.
- GROUND ROD AND GROUND ROD BOX.
- FLEXIBLE LIQUID-TIGHT CONDUIT CONNECTION
- SS — PUSHBUTTON STATION "SS" START-STOP, "LOS" LOCK-OUT-STOP, "SLOS" START-LOCK-OUT-STOP.
- EQUIPMENT JUNCTION BOX.
- JUNCTION BOX OR FITTING
- DISCONNECT SWITCH, SIZE AS NOTED ON DWGS.
- LIGHTING PANEL
- INDEX TO NOTE 1. "SEE NOTE 1"
- 3a — SINGLE POLE SWITCH. "a" INDICATES OUTLET CONTROLLED
- SM — MANUAL MOTOR STARTER
- 120V. DUPLEX RECEPTACLE, NEMA CONFIGURATION 5-20.
- MOLDED CASE CIRCUIT BREAKER, 3 POLE UNLESS NOTED.
- ACROSS THE LINE, NON REVERSING NEME SIZE 1 MAGNETIC STARTER
- TRANSFORMER, WITH GROUNDED SECONDARY.
- NORMALY OPEN CONTACT.
- NORMALY CLOSED CONTACT.
- PRESSURE SWITCH.
- PUSH TO TEST INDICATING LIGHT
- OH / O O / OA — THREE-POSITION SELECTOR SWITCH: H-HAND, M-MANUAL, R-REMOTE, L-LOCAL, A-AUTOMATIC, O-OFF.

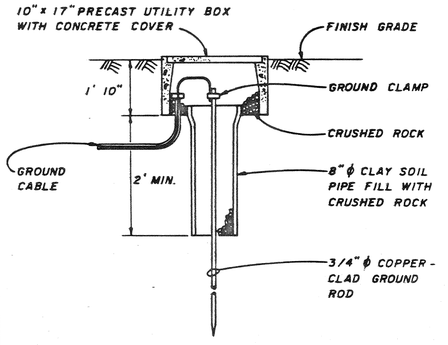

GROUND ROD & WELL A —

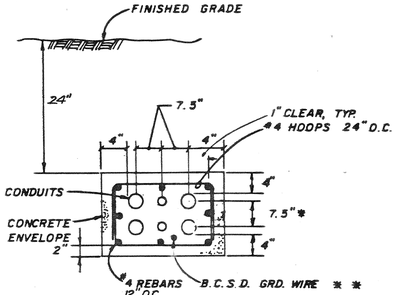

* 7.5" CLEAR BETWEEN POWER & TELEPHONE OR SIGNAL CONDUIT.

** TERMINATE GRD WIRE ON SWITCHGEAR GRD. BUSS.

DUCT BANK SECTION B —

DUCT BANK SHALL BE COLORED RED.

REGISTERED PROFESSIONAL ENGINEER — MARCOS R. SANCHEZ — No. 7345 — 9/30/90 — ELECTRICAL — STATE OF CALIFORNIA

REV	DATE	BY	DESCRIPTION

SCALE: AS NOTED

DESIGNED H. Rodriguez
DRAWN M. Rodriguez-Roma
CHECKED M. Sanchez

SUBMITTED — PROJECT ENGINEER — C24015 R.C.E. NO. — 4/27/88 DATE
RECOMMENDED — JAMES M. MONTGOMERY CONSULTING ENGINEERS, INC. — 24656 R.C.E. NO. — 4/27/88 DATE

JAMES M. MONTGOMERY CONSULTING ENGINEERS, INC.
P.O. BOX 7009, 250 N. MADISON AVE., PASADENA, CA 91109-7009

APPROVED Joseph L. Topa RCE 18692 City Eng'r — 5/18/88 DATE
APPROVED — DATE

CITY OF SAN FERNANDO
WATER FACILITIES FOR ASSESSMENT DISTRICT NO. D-272
RESERVOIR
PLOT PLAN, SYMBOLS AND GENERAL NOTES

SHEET E-1 OF 52 SHEETS

JOB NO. 18-0166 FILE CD

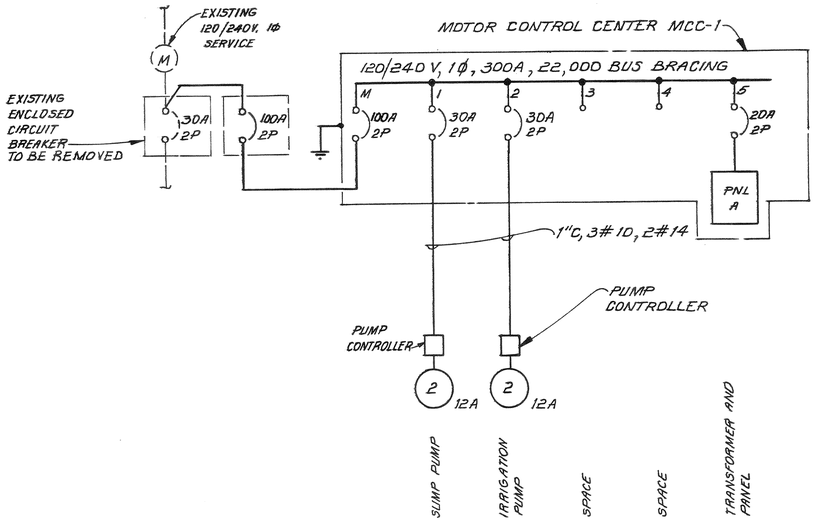

SINGLE LINE DIAGRAM

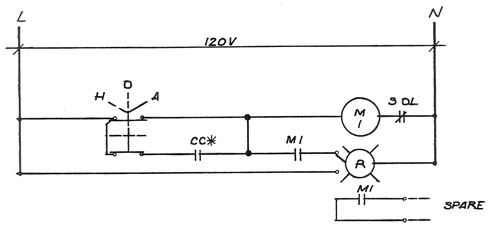

IRRIGATION PUMP

* CONTROL CONTACT FROM IRRIGATION EQUIPMENT, FURNISHED BY IRRIGATION CONTRACTOR

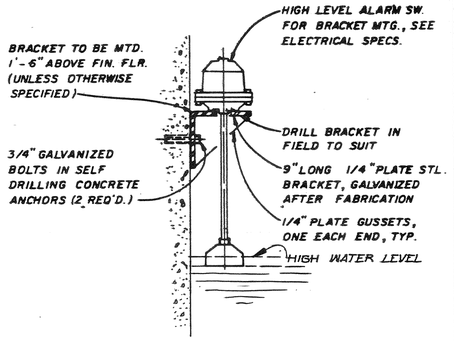

FLOOD ALARM SWITCH

A
E-3

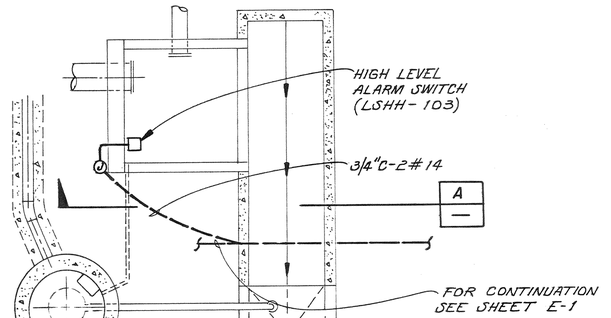

PLAN

3/8"=1'-0"

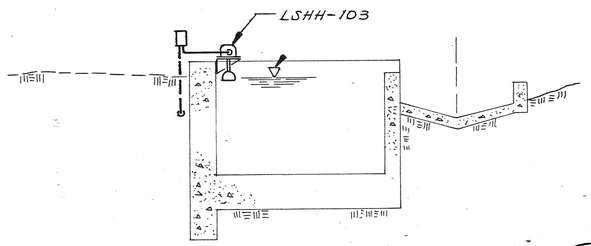

SECTION A — 3/8"=1'-0"

OVERFLOW STRUCTURE

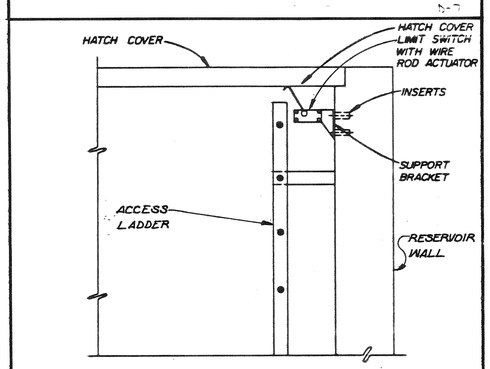

INTRUSION SWITCH MOUNTING DETAIL

B
E-3

ADJUST LIMIT SWITCH TO TRANSFER CONTACT POSITION WHEN COVER IS LIFTED.

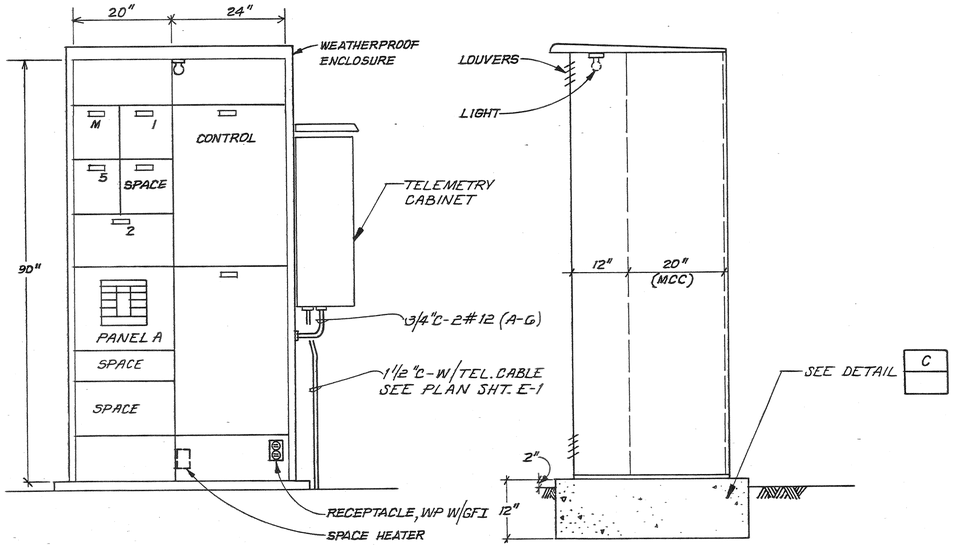

MOTOR CONTROL CENTER ELEVATION

SCALE: 3/4"=1'-0"

SIDE VIEW

TYPICAL NON-WALK-IN WEATHERPROOF ENCLOSURE

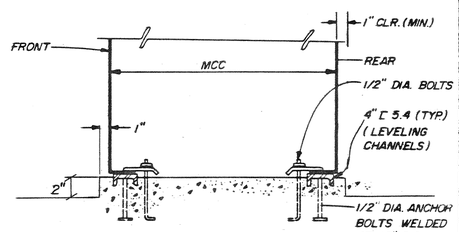

SWITCHBOARD (MCC) MOUNTING

C
—

REGISTERED PROFESSIONAL ENGINEER — RAMCOS R. SANTOS — No. 7345 — 9/30/90 — ELECTRICAL — STATE OF CALIFORNIA

REV	DATE	BY	DESCRIPTION

SCALE:

DESIGNED H. Pontarelli
DRAWN A.A. Rodriguez
CHECKED M. Sellitti

SUBMITTED Black & Veatch — PROJECT ENGINEER — C24015 R.C.E. NO. — 4/27/88 DATE
RECOMMENDED JAMES M. MONTGOMERY CONSULTING ENGINEERS, INC. — 24656 R.C.E. NO. — 4/27/88 DATE

JAMES M. MONTGOMERY CONSULTING ENGINEERS, INC.
P.O. BOX 7009, 250 N. MADISON AVE., PASADENA, CA 91109-7009

APPROVED Joseph D. Hoper RCE 18642 — City Engineer — 5/18/88 DATE
APPROVED — DATE

CITY OF SAN FERNANDO
WATER FACILITIES FOR ASSESSMENT DISTRICT NO. D-272
RESERVOIR
SINGLE LINE DIAGRAM AND DETAILS

SHEET E-2 OF 52 SHEETS

JOB NO. 10-0149
FILE

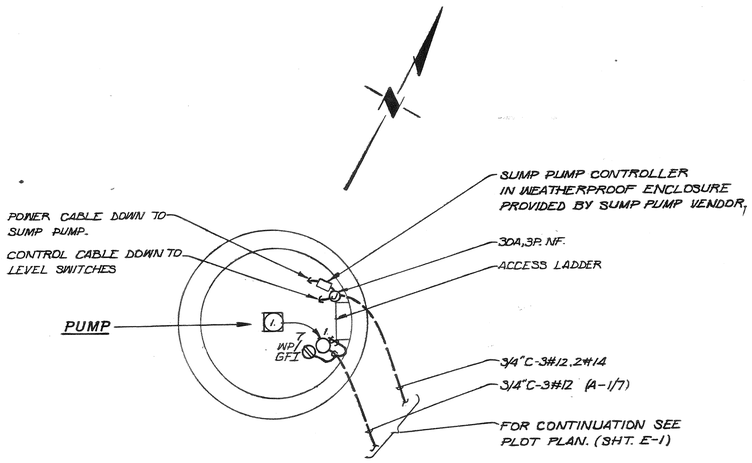

PLAN
1/2" = 1'-0"

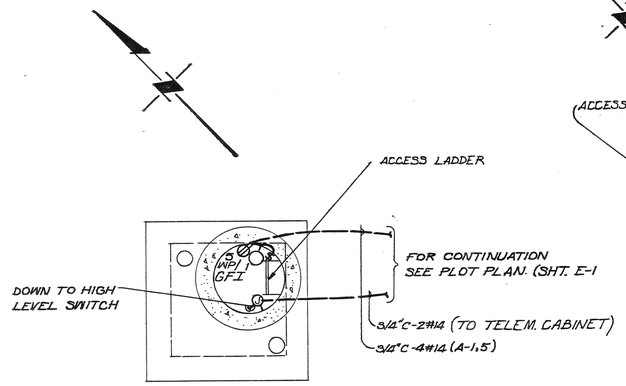

PLAN
3/8" = 1'-0"

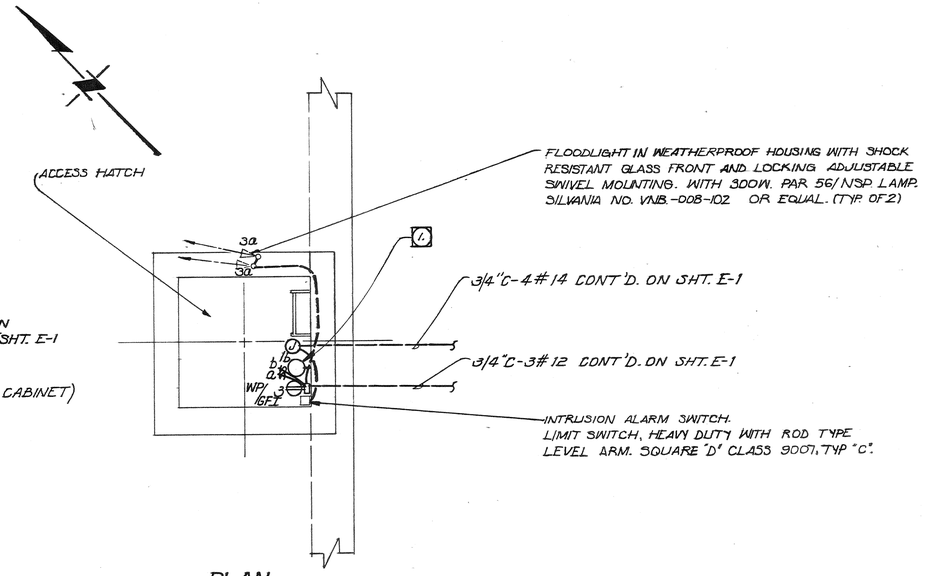

PLAN
(NTS)

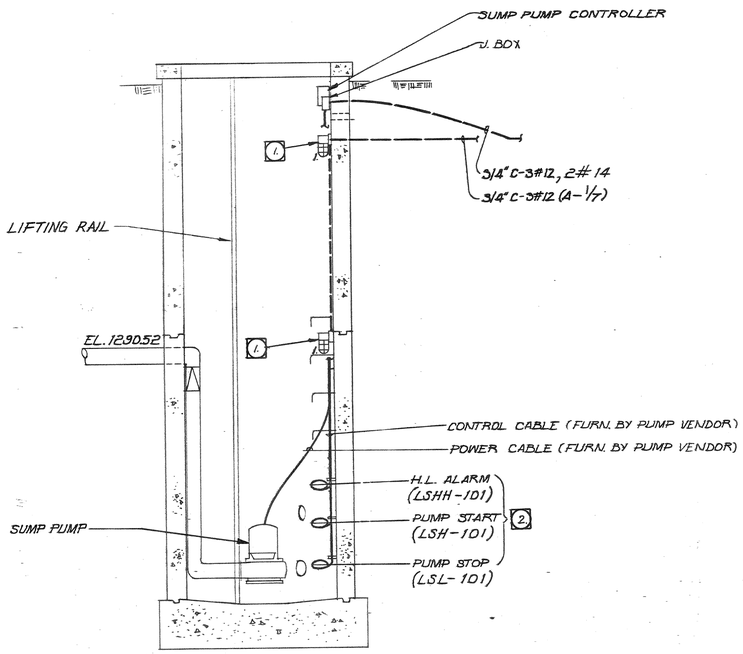

SECTION
1/2" = 1'-0"

COLLECTOR MANHOLE

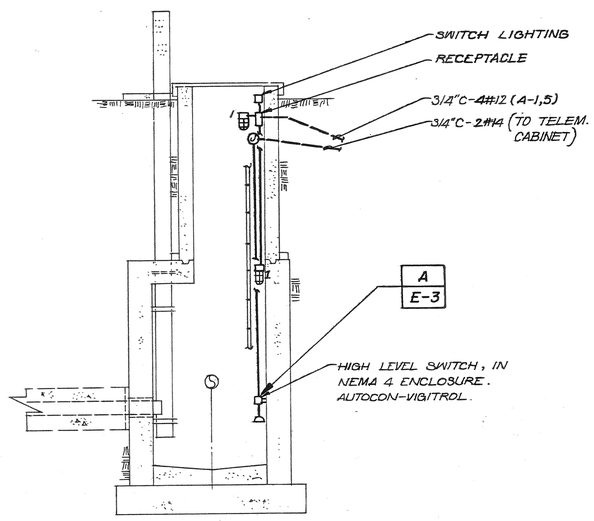

SECTION
3/8" = 1'-0"

OBSERVATION MANHOLE

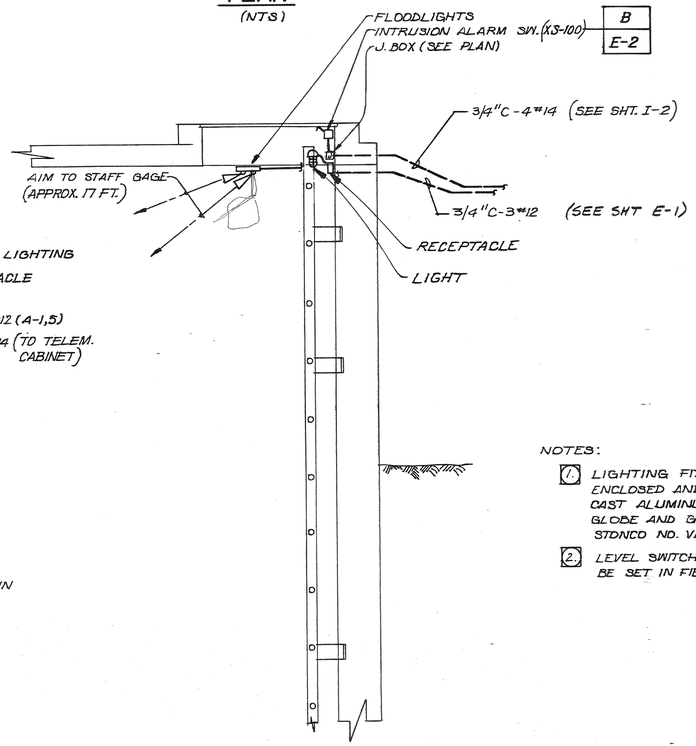

SECTION
(NTS)

RESERVOIR ACCESS

NOTES:

1. LIGHTING FIXTURE: INCANDESCENT, WALL MOUNTED, ENCLOSED AND GASKETED, VAPORTIGHT, CORROSION RESISTANT, CAST ALUMINUM CONSTRUCTION, WITH 150W LAMP, GLASS GLOBE AND GUARD. STONCO NO. VWXL-21GC OR EQUAL
2. LEVEL SWITCHES (FLOAT TYPE). OPERATING LEVELS TO BE SET IN FIELD.

REGISTERED PROFESSIONAL ENGINEER MARCOS R. SANTOS No. 7345 9/30/90 ELECTRICAL STATE OF CALIFORNIA

REV	DATE	BY	DESCRIPTION

SCALE: AS NOTED

DESIGNED H. Rodriguez
DRAWN M. Rodriguez
CHECKED M. Santos

SUBMITTED PROJECT ENGINEER — C24015 R.C.E. NO. — 4/27/88 DATE
RECOMMENDED JAMES M. MONTGOMERY CONSULTING ENGINEERS, INC. — 24656 R.C.E. NO. — 4/27/88 DATE

JAMES M. MONTGOMERY CONSULTING ENGINEERS, INC.
P.O. BOX 7009, 250 N. MADISON AVE., PASADENA, CA 91109-7009

APPROVED Joseph R. Lopez RCE 18,642 City Engineer — 5/18/88 DATE
APPROVED — DATE

CITY OF SAN FERNANDO
WATER FACILITIES FOR ASSESSMENT DISTRICT NO.D-272
RESERVOIR ELECTRICAL PLANS AND DETAILS

SHEET E-3 OF 52 SHEETS

JOB NO. 18.0166 FILE CC

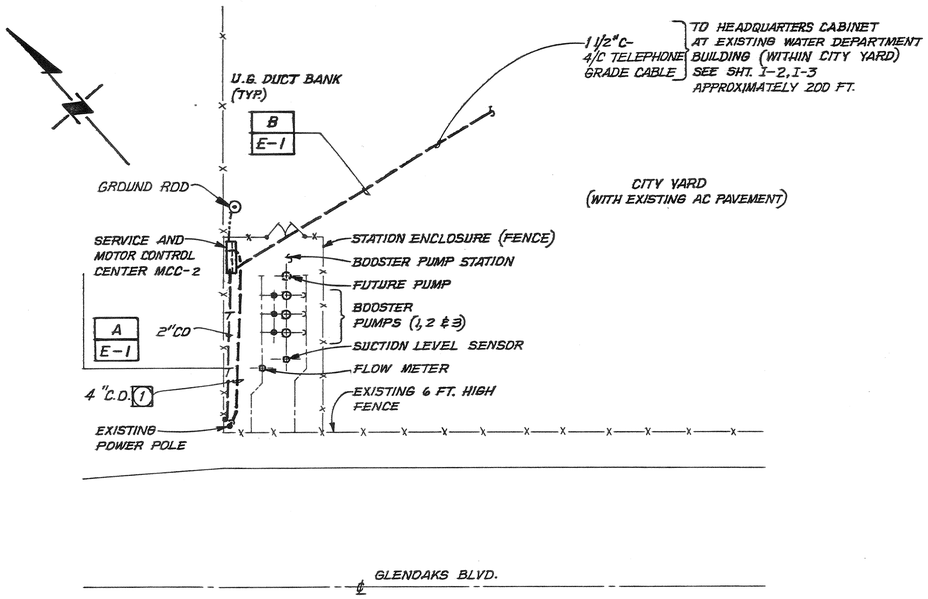

PLOT PLAN
SCALE: 1"=20'

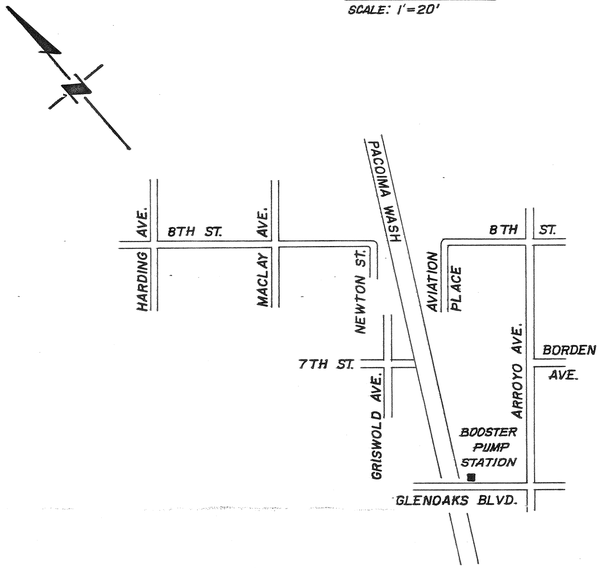

KEY PLAN
SCALE: 1"=800' (APROX)

NOTES:

1. TERMINATE CONDUIT AT SERVICE POLE PER UTILITY COMPANY REQUIREMENTS.

REGISTERED PROFESSIONAL ENGINEER MARCOS R. SANTOS No. 7345 ELECTRICAL STATE OF CALIFORNIA 9/20/90

REV	DATE	BY	DESCRIPTION

SCALE: AS NOTED

DESIGNED H. Rodriguez
DRAWN Byron Ellis
CHECKED M. Santos

SUBMITTED PROJECT ENGINEER — C24015 R.C.E. NO. — 4/27/88 DATE
RECOMMENDED JAMES M. MONTGOMERY CONSULTING ENGINEERS, INC. — 24656 R.C.E. NO. — 4/27/88 DATE

JAMES M. MONTGOMERY CONSULTING ENGINEERS, INC.
P.O. BOX 7009, 250 N. MADISON AVE., PASADENA, CA 91109-7009

APPROVED Joseph L. Lopez RCE 18642 City Engineer — 5/13/88 DATE
APPROVED — DATE

CITY OF SAN FERNANDO
WATER FACILITIES FOR ASSESSMENT DISTRICT NO. D-272
BOOSTER PUMP STATION
PLOT PLAN, SYMBOLS AND NOTES

SHEET E-4 OF 52 SHEETS

JOB NO. 18.0199 FILE CC

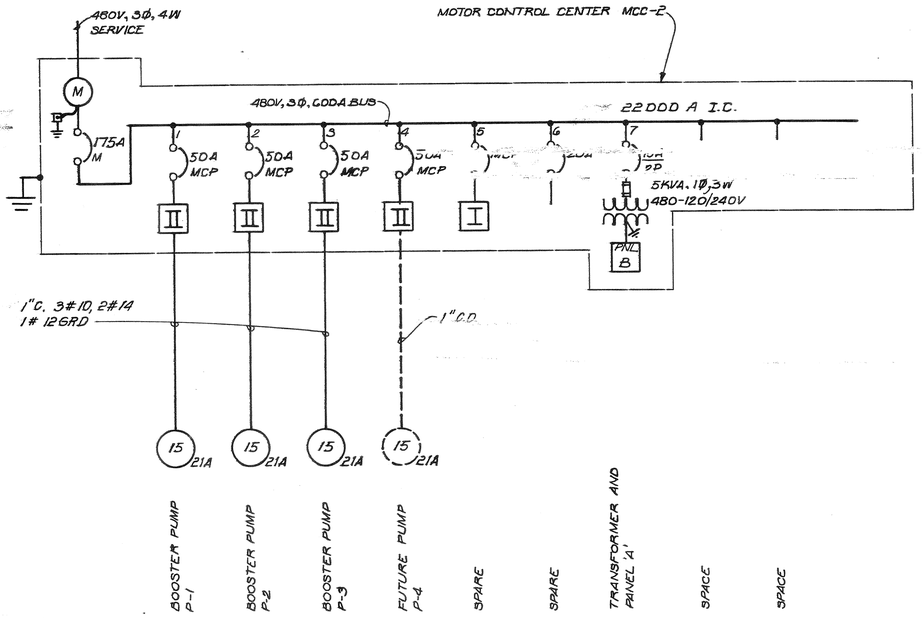

SINGLE LINE DIAGRAM

120/240 VOLTS 1 Φ 3 W — PANELBOARD B — FEED
30A, 2P MAIN — LOCATION AT PUMP STATION — MTG IN MCC-1

LOAD DESCRIPTION	WATTAGE OR VA ΦA	ΦB	ΦC	LTG	REC	MIS	CIR	BKR		BKR	CIR	MIS	REC	LTG	WATTAGE OR VA ΦA	ΦB	ΦC	LOAD DESCRIPTION
▲ LIGHTS	600			4			1	20		15	2				500			MCC SPACE HTR. & FAN
SPARE		500					3	15		20	4		1			200		MCC RECEP.
TELEMETRY	300					1	5	15		15	6				500			TELEMETRY
SPACE							7			15	8	1				300		CONTROL POWER
							9				10							SPACE
							11				12							
							13				14							
							15				16							
	300	500					TOTAL			TOTAL					1000	500		
	PHASE TOTALS			TOTAL LOAD														
	1900	100		2.9 KVA (12.1 AMPS)														

▲ CIRCUIT CONTROLLED BY TIME SWITCH (7-DAY ASTRO-DIAL) MOUNTED IN CONTROL COMPARTMENT OF MCC

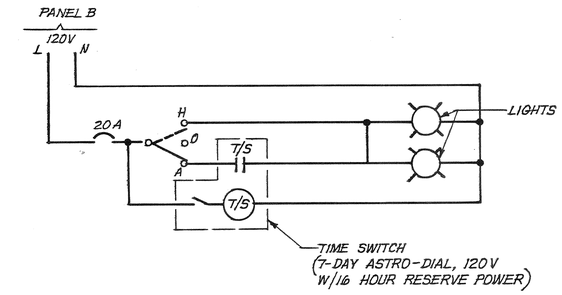

AREA LIGHTS CONTROL

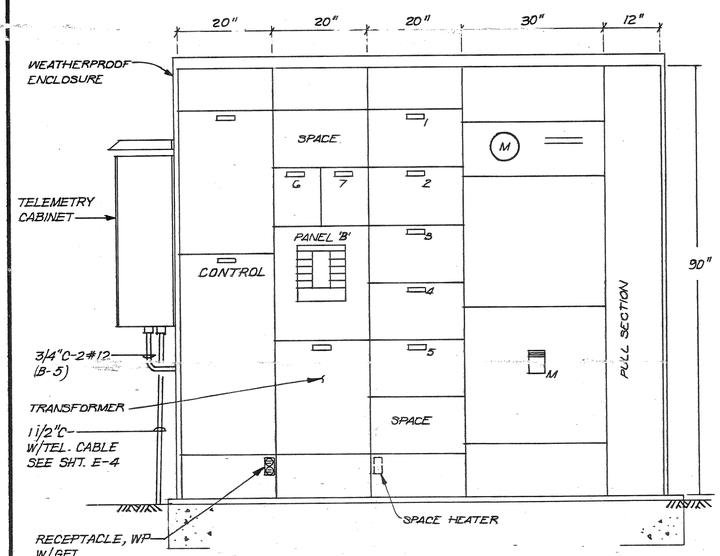

MCC-2 ELEVATION

(WEATHERPROOF ENCLOSURE NOT SHOWN)
SCALE: 3/4"=1'-0"

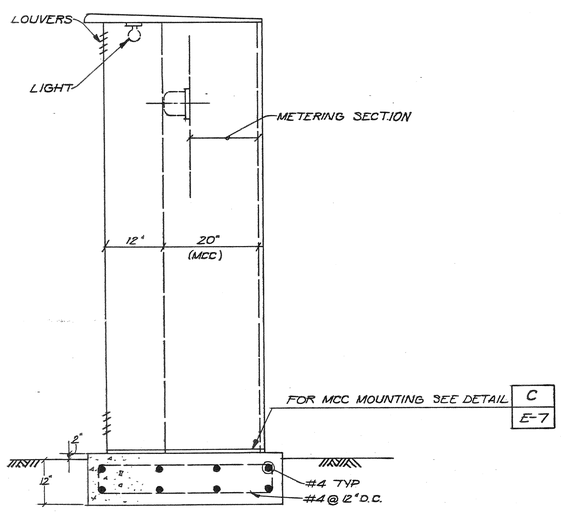

SIDE VIEW

TYPICAL NON-WALK-IN WEATHERPROOF ENCLOSURE
SCALE: 3/4"=1'-0"

REGISTERED PROFESSIONAL ENGINEER — MARCOS R. SANCHEZ — No. 7345 — 3/30/90 — ELECTRICAL — STATE OF CALIFORNIA

REV	DATE	BY	DESCRIPTION

SCALE: AS NOTED

DESIGNED H. Rodriguez
DRAWN [illegible]
CHECKED [illegible]

SUBMITTED [illegible] PROJECT ENGINEER — C24015 R.C.E. NO. — 4/27/88 DATE
RECOMMENDED [illegible] JAMES M. MONTGOMERY CONSULTING ENGINEERS, INC. — 24656 R.C.E. NO. — 4/27/88 DATE

JAMES M. MONTGOMERY CONSULTING ENGINEERS, INC.
250 North Madison Avenue, Post Office Box 7009, Pasadena, California 91109-7009

APPROVED [illegible] City Engineer — 5/18/88 DATE
APPROVED _____ DATE

CITY OF SAN FERNANDO
WATER FACILITIES FOR ASSESSMENT DISTRICT NO. D-272
BOOSTER PUMP STATION
SINGLE LINE DIAGRAM, MCC AND DETAILS

SHEET E-5 OF 52 SHEETS

FILE — CC — JOB NO.

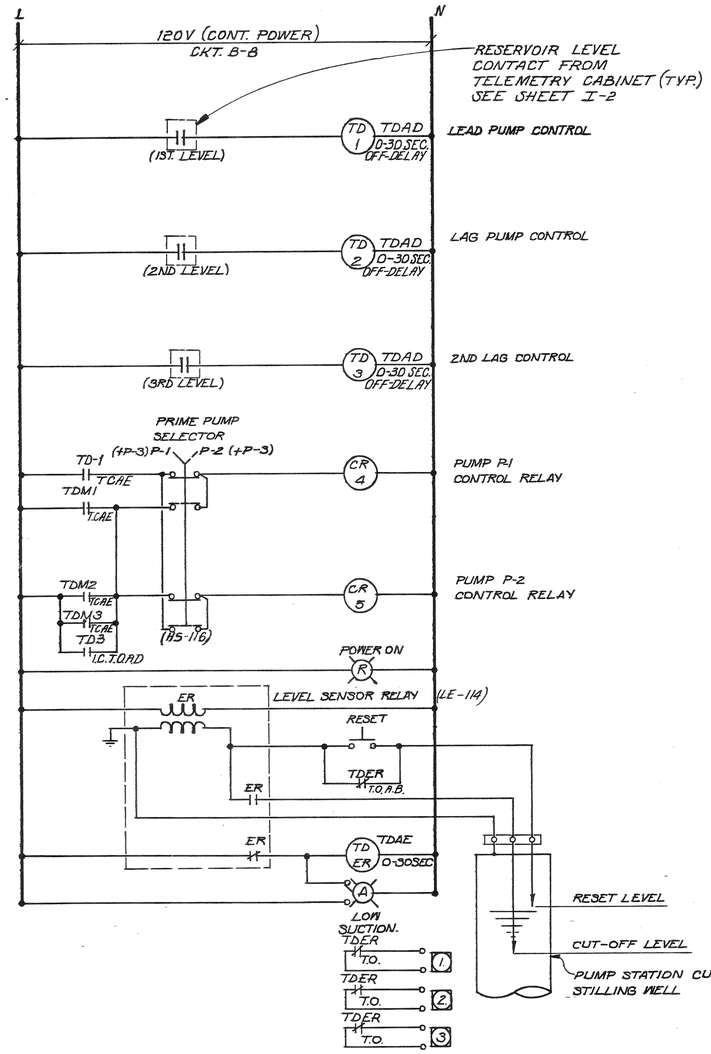

1 TO PUMP P-1 CONTROL CIRCUIT
2 TO PUMP P-2 CONTROL CIRCUIT
3 TO PUMP P-3 CONTROL CIRCUIT

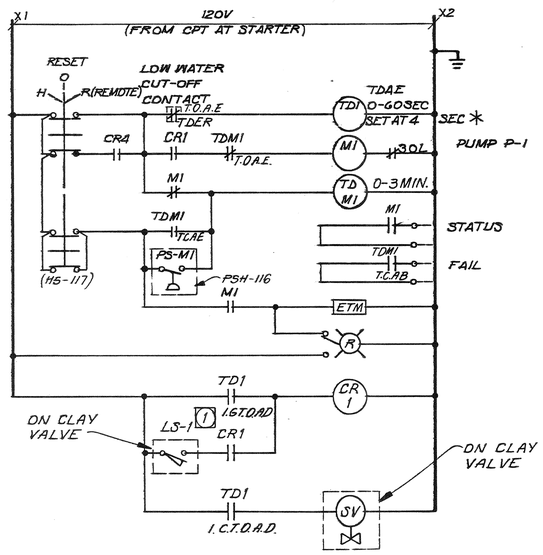

BOOSTER PUMP P-1

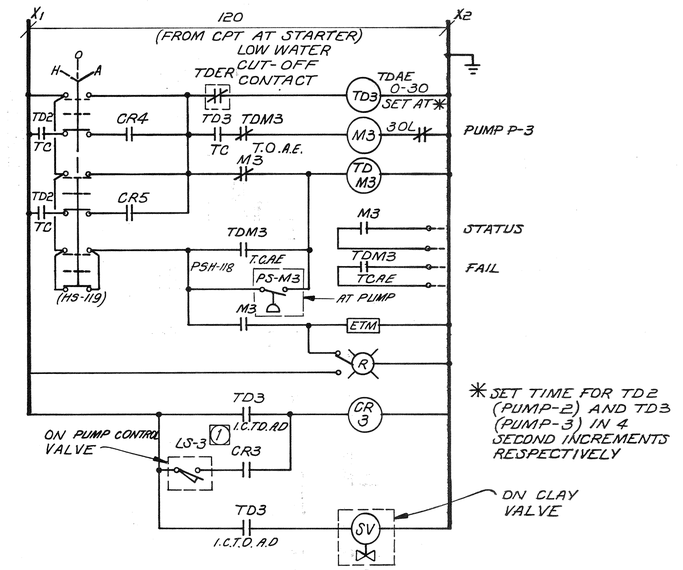

BOOSTER PUMP P-3

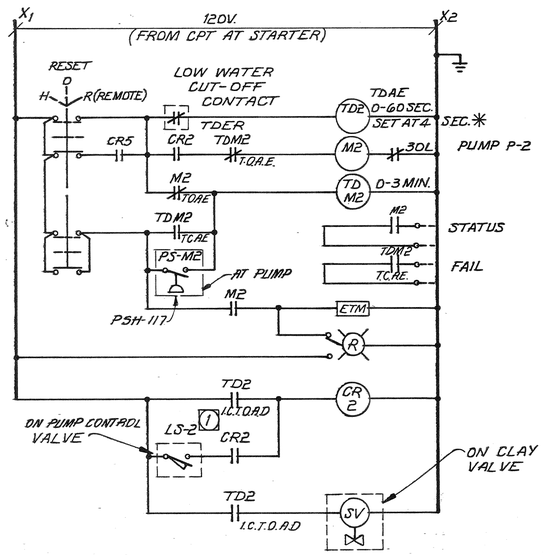

BOOSTER PUMP P-2

NOTES:

1. LIMIT SWITCH ON PUMP CONTROL VALVE, OPEN WHEN VALVE CLOSED.

T.C.A.E. - TIME CLOSE AFTER ENERGIZATION.
T.O.A.E - TIME OPEN AFTER ENERGIZATION.
I.C.T.O.A.D - INSTANTANEOUS CLOSE - TIME OPEN AFTER DEENERGIZATION.
T.O.A.D - TIME DELAY AFTER DEENERGIZATION.

REGISTERED PROFESSIONAL ENGINEER
FRANCOS R. SMITH
No. 7345
9/30/91
ELECTRICAL
STATE OF CALIFORNIA

REV	DATE	BY	DESCRIPTION

SCALE: NONE

DESIGNED H. Rodriguez
DRAWN J. Rodriguez / Uema
CHECKED

SUBMITTED
PROJECT ENGINEER — C24015 R.C.E. NO. — 4/27/88 DATE

RECOMMENDED
JAMES M. MONTGOMERY CONSULTING ENGINEERS, INC. — 24656 R.C.E. NO. — 4/27/88 DATE

JAMES M. MONTGOMERY CONSULTING ENGINEERS, INC.
P.O. BOX 7009, 250 N. MADISON AVE., PASADENA, CA 91109-7009

APPROVED Joseph Q. Lopez RCE 18692 City Engineer — 5/18/88 DATE
APPROVED — DATE

CITY OF SAN FERNANDO
WATER FACILITIES FOR ASSESSMENT DISTRICT NO. D-272
BOOSTER PUMP STATION
SCHEMATIC DIAGRAMS, MISC. DETAILS

SHEET E-6 OF 52 SHEETS

CC
FILE
JOB NO. 24656

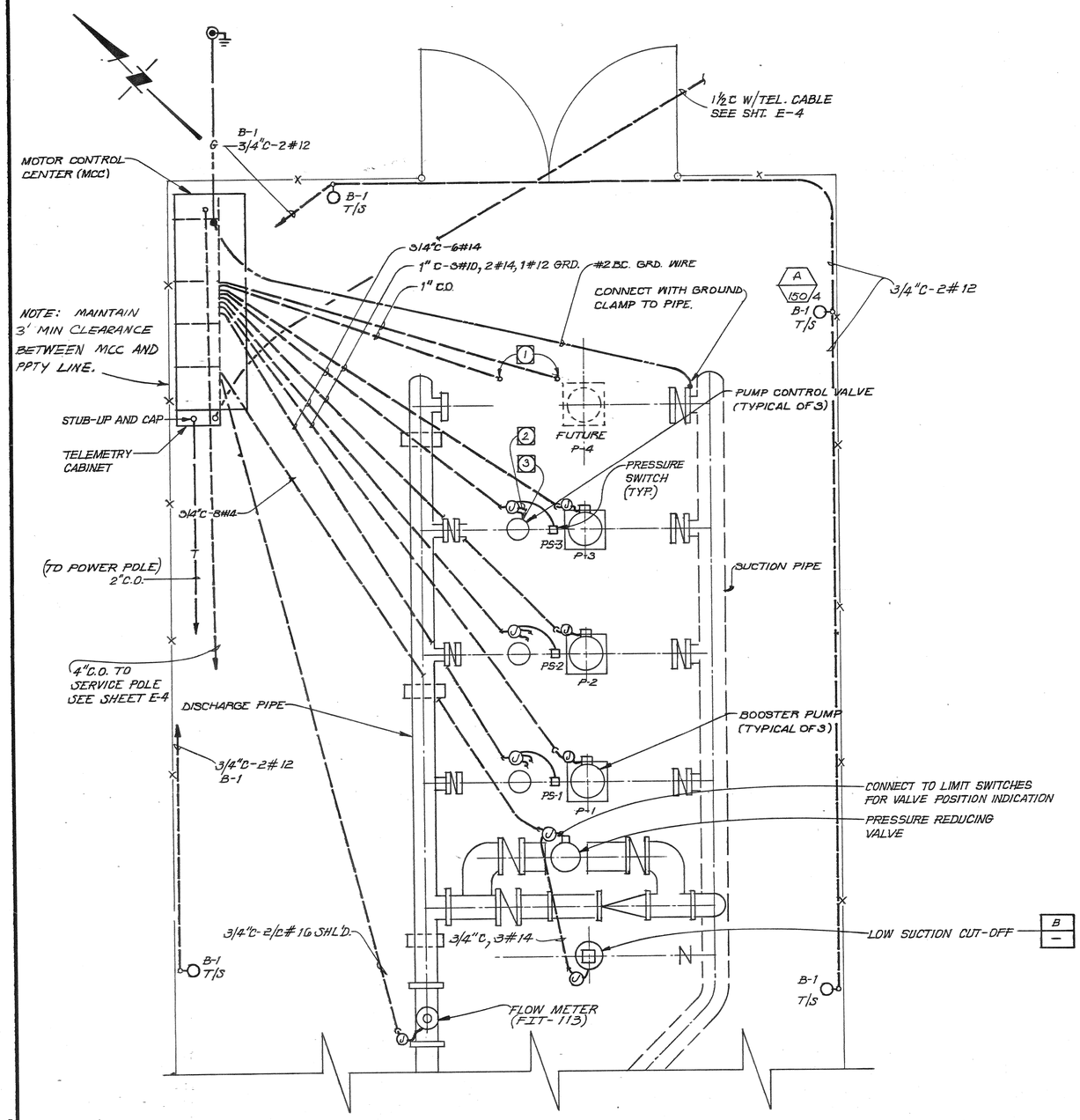

PLAN

SCALE 3/8"=1'-0"

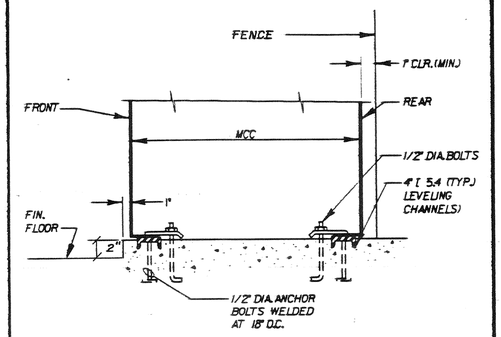

SWITCHBOARD (MCC) MOUNTING C E-2

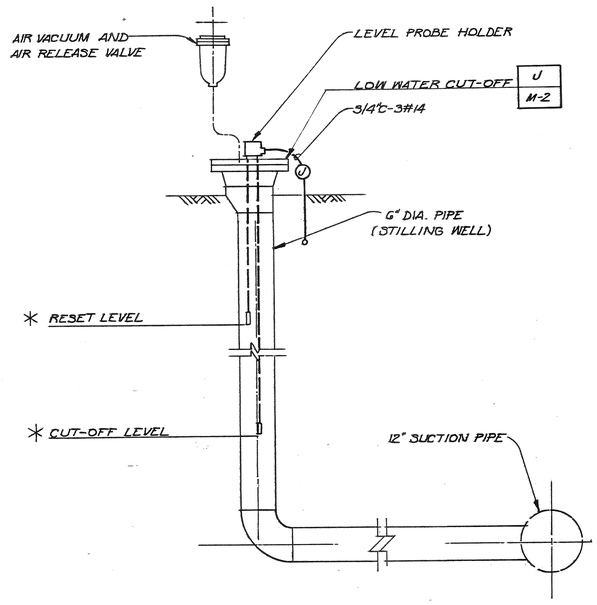

SUCTION LOW WATER CUT-OFF DETAIL B

* PROBE SETTING TO BE DETERMINED IN FIELD

NOTES:

1. TERMINATE AND CAP CONDUIT, FOR FUTURE USE.
2. CONNECT TO PUMP CONTROL VALVE SOLENOID (TYPICAL 3 PLACES)
3. CONNECT TO PUMP CONTROL VALVE LIMIT SWITCH FOR VALVE STATUS INDICATOR. (TYPICAL 3 PLACES)

A 150 HIGH PRESSURE SODIUM LIGHTING FIXTURE, ALUMINUM HOUSING WITH CLEAR TEMPERED GLASS, INTEGRAL BALLAST AND DARK BRONZE ANODIZED FINISH, MOUNTED ON 12 FT. SQUARE ALUMINUM POLE WITH DARK BRONZE ACRYLIC FINISH.

CROUSE-HINDS NO. ASL-1LHR2-AA-FSL-DBA
POLE NO. ML5 101-1

REGISTERED PROFESSIONAL ENGINEER MARCOS R. SANTOS No. 7345 ELECTRICAL STATE OF CALIFORNIA 9/30/91

REV	DATE	BY	DESCRIPTION

SCALE: AS NOTED

DESIGNED H. Rodriguez
DRAWN J. Rodriguez
CHECKED M. Santos

SUBMITTED PROJECT ENGINEER — C24015 R.C.E. NO. — 4/27/88 DATE
RECOMMENDED JAMES M. MONTGOMERY CONSULTING ENGINEERS, INC. — 24656 R.C.E. NO. — 4/27/88 DATE

JAMES M. MONTGOMERY CONSULTING ENGINEERS, INC.
P.O. BOX 7009, 250 N. MADISON AVE., PASADENA, CA 91109-7009

APPROVED Joseph R. Lopez RCE 18642 City Engineer — 5/18/88 DATE
APPROVED — DATE

CITY OF SAN FERNANDO
WATER FACILITIES FOR ASSESSMENT DISTRICT NO. D-272
BOOSTER PUMP STATION ELECTRICAL PLAN

SHEET E-7 OF 52 SHEETS

JOB NO. 18-0766 FILE CC

INSTRUMENTATION SYMBOLS

- LIT — INSTRUMENT OR OTHER COMPONENT TO BE MOUNTED IN THE FIELD
- TSL — INSTRUMENT OR OTHER COMPONENT TO BE MOUNTED INSIDE MAIN CONTROL BOARD OR OTHER PANEL AS MARKED
- FIC — INSTRUMENT OR OTHER COMPONENT TO BE MOUNTED ON MCB FRONT PANEL OR OTHER PANEL AS MARKED
- PIR PSH — SINGLE INSTRUMENT OR OTHER COMPONENT HAVING MULTIPLE FUNCTIONS
- INSTRUMENT OR OTHER COMPONENT TO BE FURNISHED AND INSTALLED BY OTHERS IN THE FUTURE
- F — COMPUTER INTERFACE
- RELATED DEVICE PERFORMS LINEARIZING OR SQUARE ROOT FUNCTION
- RELATED DEVICE PERFORMS MULTIPLYING SUMMATING OR DIVISION FUNCTION
- I — GENERALIZED FOR COMPLEX INTERLOCK LOGIC-SEE ELECTRICAL SCHEMATICS OR SPECIFICATIONS
- OR — INTERLOCK IF ANY ONE OR MORE INPUTS EXIST
- AND — INTERLOCK IF ALL INPUTS EXIST
- STATUS OR PILOT LIGHT R-RED G-GREEN A-AMBER **W-WHITE**

CV=CONTROLLED VARIABLE
SP=SET POINT
PD=PULSE DURATION
PF=PULSE FREQUENCY
I=CURRENT
E=VOLTAGE
P=PNEUMATIC

- PNEUMATIC PRESSURE (P) SIGNAL
- (3) INDICATES QUANTITY OF SIGNALS (THREE)
- ELECTRIC SIGNAL
- HYDRAULIC LINE
- PROCESS PIPING
- SONIC SIGNAL
- CAPILLIARY TUBING (FILLED SYSTEM)
- E.S. 24VDC — POWER SUPPLY AS NOTED (24V,60HZ,24VDC,ETC)
- A.S. — AIR SUPPLY (20 PSIG-EXCEPT AS NOTED)
- PRIMARY ELECTRICAL SUPPLY (120V.60HZ)
- * — INDICATED COMPONENTS ARE NOT SPECIFIED AS PART OF THE INSTRUMENT PACKAGE
- CABLE(MULTICONDUCTER OR COAXIAL) FURNISHED WITH EQUIPMENT
- MULTIPLEXER LOOP
- EX — EXISTING COMPONENT

PRIMARY ELEMENT SYMBOLS

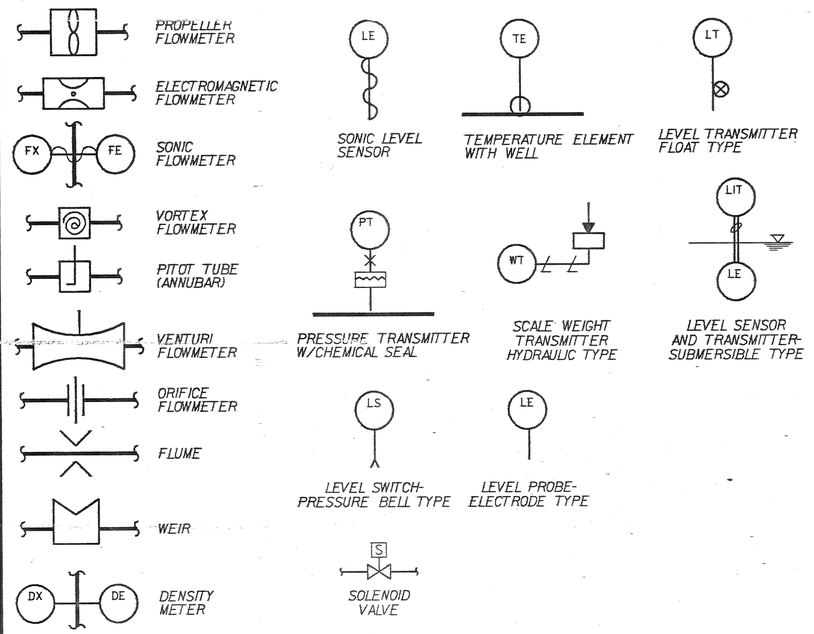

TELEMETRY SYMBOLS AND ABBREVIATIONS

- T — AM TYPE TONE TRANSMITTER
- R — AM TYPE TONE RECEIVER
- FST — FREQUENCY SHIFT TRANSMITTER
- FSR — FREQUENCY SHIFT RECEIVER
- LPU — LINE PROTECTION UNIT
- RELAY CONTACTS - N.C., N.O.

ALT — ALTERNATOR
COMM — COMMUNICATION
HOA — HAND-OFF-AUTOMATIC
HOR — HAND-OFF-REMOTE
M — MARK FREQUENCY
MCC — MOTOR CONTROL CENTER
MS — MOTOR STARTER
S — SPACE FREQUENCY
XMTR — TRANSMITTER

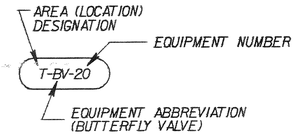

MECHANICAL EQUIPMENT CALLOUT

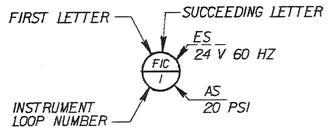

INSTRUMENT TAG NUMBER

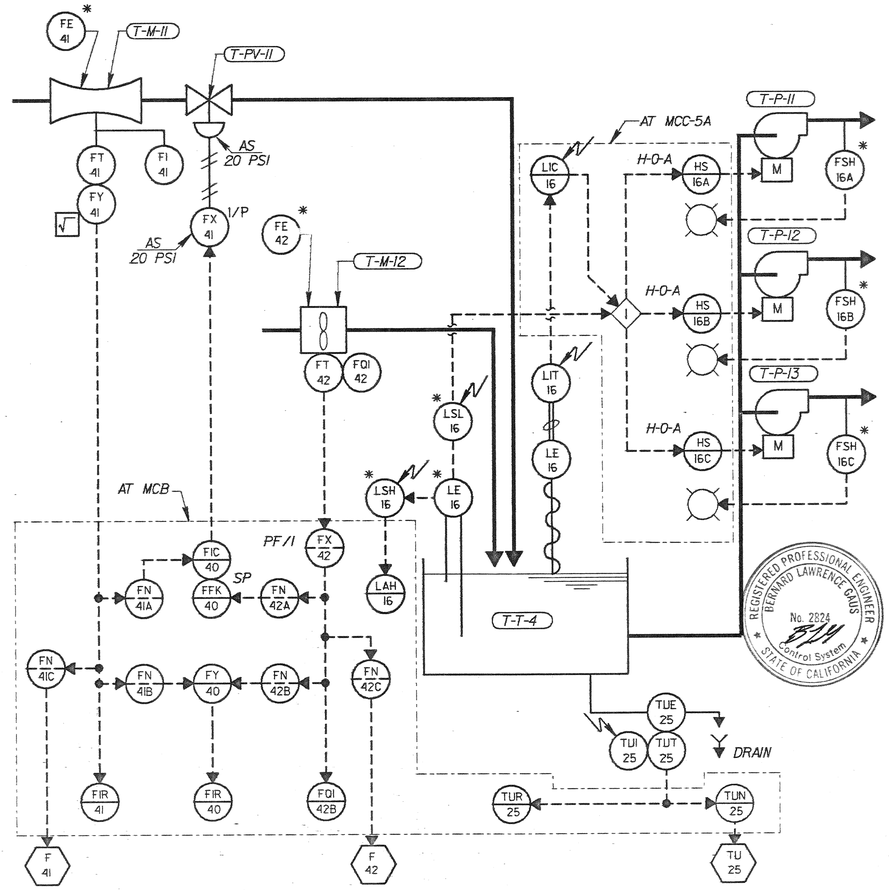

SAMPLE LOOP DIAGRAM

INSTRUMENT IDENTIFICATION TAG LETTERS

LETTER	FIRST LETTER: MEASURED OR INITIATING VARIABLE	FIRST LETTER: MODIFIER	SUCCEEDING LETTERS: READOUT OR PASSIVE FUNCTION	SUCCEEDING LETTERS: OUTPUT FUNCTION	SUCCEEDING LETTERS: MODIFIER
A	ANALYSIS		ALARM		
B					
C	CONDUCTIVITY (ELECTRICAL)			CONTROL	CLOSED
D	DENSITY				
E	VOLTAGE (EMF)		PRIMARY ELEMENT		
F	FLOW RATE	RATIO			
G					
H	HAND (MANUALLY INITIATED)				HIGH
I	CURRENT (ELECT)		INDICATE		
J	POWER				
K	TIME OR TIME SCHEDULE			CONTROL STA.	
L	LEVEL				LOW
M	MOISTURE OR HUMIDITY				MIDDLE OR INTERMEDIATE
N	TORQUE		ISOLATOR		
O	DISSOLVED OXYGEN				OPEN
P	PRESSURE OR PNEUMATIC				
Q	QUANTITY OR EVENT	INTEGRATE TOTALIZER			
R	RADIOACTIVITY		RECORD OR PRINT		
S	SPEED / FREQUENCY			SWITCH	
T	TEMPERATURE			TRANSMIT	
U	MULTIVARIABLE		MULTIFUNCTION	MULTIFUNCTION	MULTIFUNCTION
V				VALVE DAMPER OR LOUVER	
W	WEIGHT OR FORCE		WELL		
X				CONVERTER	
Y				RELAY OR COMPUTE	
Z	POSITION				
Cl	CHLORINE RESIDUAL				
Dp	DIFFERENTIAL PRESSURE				
pH	HYDROGEN CONCENTRATION				
Tu	TURBIDITY				
Ss	SUSPENDED SOLIDS				
O_2	OZONE CONCENTRATION				

SAMPLE INSTRUMENT TAG NUMBERS

TAG NUMBER	FUNCTION
FE-41	FLOW SENSING ELEMENT (LOOP 41)
FI-41	FLOW INDICATOR
FIC-41	FLOW INDICATING CONTROLLER
FIR-41	FLOW INDICATING RECORDER
FFK-41	FLOW RATIO STATION
FN-41	FLOW SIGNAL ISOLATOR
FQI-41	FLOW INTEGRATING TOTALIZER
FSH-41	FLOW SWITCH HIGH
FSLL-41	FLOW SWITCH LOW LOW (EXTREME)
FT-41	FLOW TRANSMITTER
FX-41	FLOW SIGNAL CONVERTER
FY-41	FLOW SIGNAL MATH FUNCTION

NOTES

1. ADDITIONAL INSTRUMENTATION AND CONTROL SYMBOLS MAY BE USED AS REQUIRED. SYMBOLS AND NONMENCLATURE ARE BASED ON ISA STANDARD S 5J
2. SEE ASSOCIATED ELECTRICAL AND MECHANICAL SYMBOL SHEETS FOR ADDITIONAL SYMBOLS AND ABBREVIATIONS.
3. FOR PIPE SIZES, MATERIAL, AS WELL AS DETAILS OF METER COUPLING AND OTHER MECHANICAL EQUIPMENT (e.g. VALVE, PUMP, ETC.) SEE MECHANICAL DRAWINGS AND SPECIFICATIONS
4. POWER SUPPLIES FOR LOOPS OR SYSTEMS SHALL BE FURNISHED BY THE INSTRUMENTATION MANUFACTURER TO MEET THE PARTICULAR CHARACTERISTICS (e.g. VOLTAGE AND CURRENT REQUIREMENTS) OF COMPONENTS IN EACH LOOP OR SYSTEM.

REV	DATE	BY	DESCRIPTION

SCALE: NONE

DESIGNED
DRAWN J.M.M. STANDARD
CHECKED

SUBMITTED
PROJECT ENGINEER — C24015 R. C. E. NO. — 4/27/88 DATE

JAMES M. MONTGOMERY, CONSULTING ENGINEERS, INC. — 24636 R. C. E. NO. — 4/27/88 DATE

JAMES M. MONTGOMERY CONSULTING ENGINEERS, INC.
P.O. BOX 7009, 250 N. MADISON AVE. PASADENA, CA. 91109-7009

JMME

APPROVED Joseph R. Topey RCE 18692 City Engineer — 5/18/88 DATE
APPROVED — DATE

CITY OF SAN FERNANDO
WATER FACILITIES FOR ASSESSMENT DISTRICT NO. D-272
INSTRUMENTATION SYMBOLS AND ABBREVIATIONS

SHEET I-I
OF 52 SHEETS

JOB No. 10.0166 FILE No. EB2130G4\INSTIDN\INSTIDN01

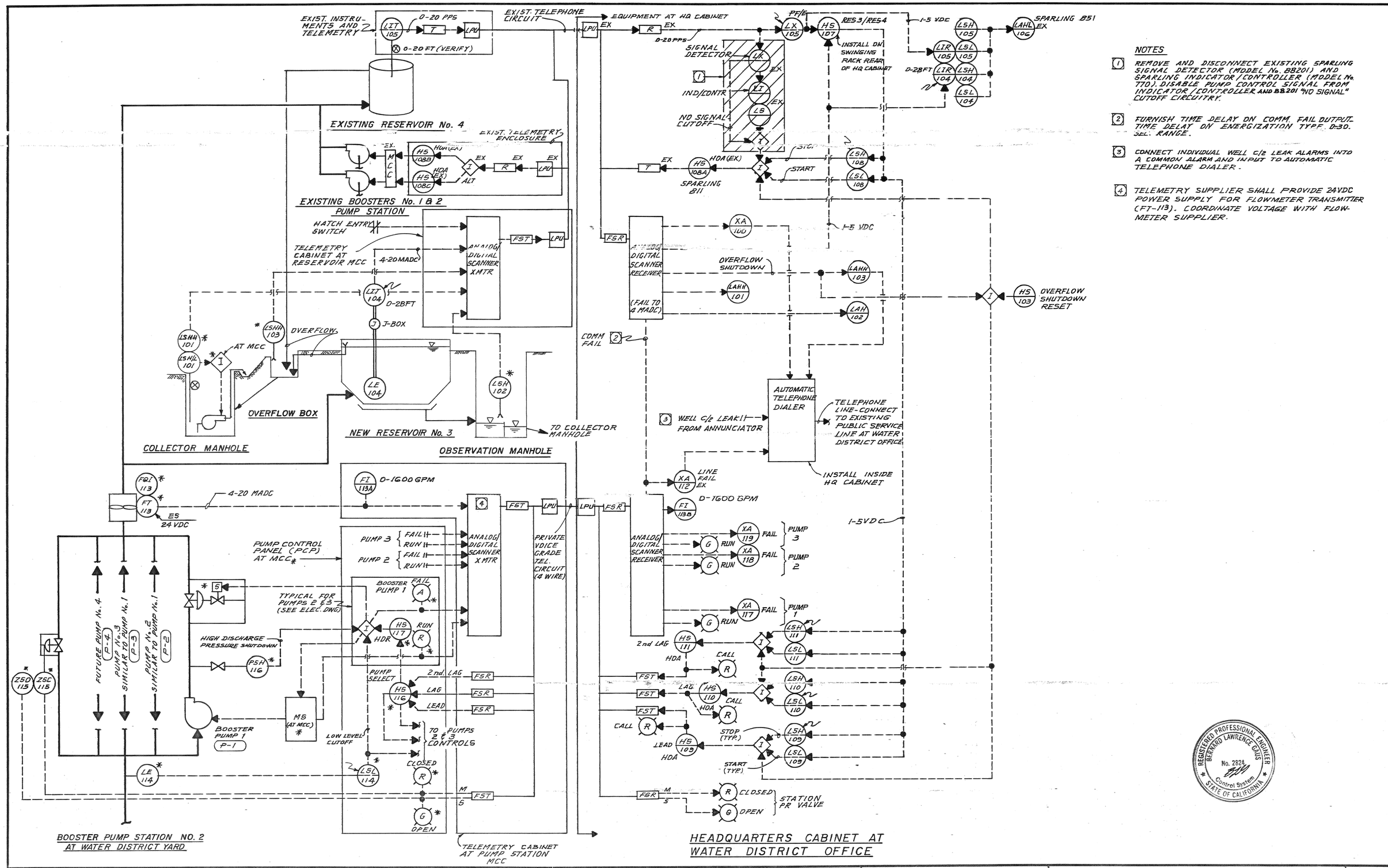

NOTES

1. REMOVE AND DISCONNECT EXISTING SPARLING SIGNAL DETECTOR (MODEL No. BB201) AND SPARLING INDICATOR/CONTROLLER (MODEL No. 770). DISABLE PUMP CONTROL SIGNAL FROM INDICATOR/CONTROLLER AND BB201 "NO SIGNAL" CUTOFF CIRCUITRY.
2. FURNISH TIME DELAY ON COMM. FAIL OUTPUT. TIME DELAY ON ENERGIZATION TYPE. 0-30. SEC. RANGE.
3. CONNECT INDIVIDUAL WELL C/2 LEAK ALARMS INTO A COMMON ALARM AND INPUT TO AUTOMATIC TELEPHONE DIALER.
4. TELEMETRY SUPPLIER SHALL PROVIDE 24VDC POWER SUPPLY FOR FLOWMETER TRANSMITTER (FT-113). COORDINATE VOLTAGE WITH FLOWMETER SUPPLIER.

REGISTERED PROFESSIONAL ENGINEER BERNARD LAWRENCE GAUS No. 28248 Control System STATE OF CALIFORNIA

REV	DATE	BY	DESCRIPTION

SCALE: NONE

DESIGNED C. Day
DRAWN N. Wagner
CHECKED

SUBMITTED Samuel Wangel PROJECT ENGINEER — C24015 R.C.E. NO. — 4/27/88 DATE
RECOMMENDED Ralph K. Strange JAMES M. MONTGOMERY CONSULTING ENGINEERS, INC. — 24656 R.C.E. NO. — 4/27/88 DATE

JAMES M. MONTGOMERY CONSULTING ENGINEERS, INC.
250 North Madison Avenue, Post Office Box 7009, Pasadena, California 91109-7009

APPROVED Joseph R. Knight RCE 18622 City Engineer — 5/13/88 DATE
APPROVED _____ DATE

CITY OF SAN FERNANDO
WATER FACILITIES FOR ASSESSMENT DISTRICT NO. D-272
TELEMETRY AND INSTRUMENTATION SYSTEMS

SHEET I-2 OF 52 SHEETS

JOB NO. 20.0188 FILE CC

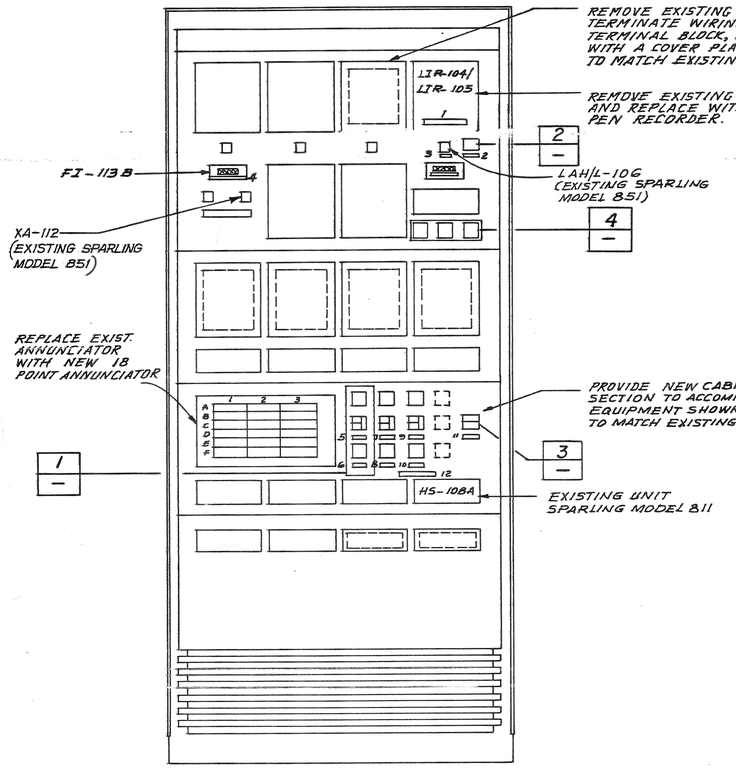

HEADQUARTERS CABINET
AT WATER DISTRICT OFFICE

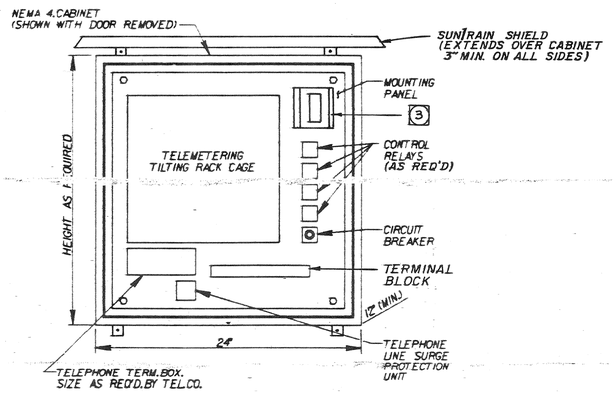

TELEMETRY CABINET — 5
TYP. BOOSTER STATION 2 AND RESERVOIR 3 SITES

1 — CALL — INDICATOR WITH RED LENS

HAND / AUTO — OFF — INTERLOCKED PUSHBUTTON SWITCH — BLACK LENS
WHITE LENSES
(HS-109)

LEAD PUMP — N/P 5

1 — RUN — INDICATOR WITH GREEN LENS

BOOSTER 3 — N/P 6

DETAIL 1
TYP. FOR LAG, 2nd LAG, BOOSTERS 4 & 5

RESET — MOMENTARY PUSHBUTTON SWITCH WITH BLACK LENS
(HS-103)

DETAIL 2

OPEN — SPLIT INDICATOR, GREEN LENS
CLOSED — RED LENS

DETAIL 3

ALARM ACK | ALARM RESET | LAMP TEST — 1

DETAIL 4
ALL MOMENTARY PUSHBUTTON SWITCHES WITH BLACK LENSES

ANNUNCIATOR SCHEDULE

NO.	INSCRIPTION	SOURCE/ TAG NO.
A1	WELL 2A C/L ALARM	EXISTING [4]
A2	RESERVOIR 3/4 OVERFLOW SHUTDOWN	LAHH-103
A3	BOOSTER NO. 1 FAIL	XA-117
B1	WELL 3 C/L ALARM	EXISTING [4]
B2	RESERVOIR 3 UNDERGROUND LEVEL HIGH	
B3	BOOSTER No. 2 FAIL	XA-118
C1	WELL 4 C/L ALARM	EXISTING [4]
C2	RESERVOIR 3/4 COLLECTOR PUMP FAIL	LAHH-101
C3	BOOSTER NO. 3 FAIL	XA-119
D1	WELL 7A C/L ALARM	EXISTING [4]
D2	RESERVOIR 3 ENTRY	XA-100
D3	———	
E1	———	
E2	———	
E3	———	
F1	———	
F2	———	
F3	———	

NAMEPLATE SCHEDULE

NO.	INSCRIPTION
1	PEN 1 RESERVOIR 3 LEVEL - FEET PEN 2 RESERVOIR 4 LEVEL - FEET
2	RESERVOIR 3/4 OVERFLOW SHUTDOWN
3	RESERVOIR 3/4
4	BOOSTER STATION 2 FLOW-GPM
5	LEAD PUMP
6	BOOSTER 1
7	LAG PUMP
8	BOOSTER 2
9	2ND LAG PUMP
10	BOOSTER 3
11	BOOSTER STATION PR VALVE
12	BOOSTER PUMP STATION 2
[2] 13	BOOSTER STATIONS 1 AND 2 LEVEL CONTROL SIGNAL RESERVOIR 3 - RESERVOIR 4

NOTE

1. LAMP TEST PUSHBUTTON SWITCH SHALL TEST ANNUNCIATOR LAMPS AND INDICATOR LAMPS SHOWN IN DETAILS 1 & 3.
2. NAMEPLATE (N/P) 13 FOR HS-107 IN REAR OF HQ CABINET.
3. AT BOOSTER STATION 2 TELEMETRY CABINET, PROVIDE MOUNTING BRACKET AND WEATHER-PROOF VIEWING WINDOW IN DOOR FOR FI-113A.
4. ALARM CURRENTLY EXISTS ON OWNER'S ANNUNCIATOR. REWIRE INTO REPLACEMENT ANNUNCIATOR FURNISHED UNDER THIS CONTRACT.

REGISTERED PROFESSIONAL ENGINEER — RICHARD LAWRENCE GANS — No. 2824 — Control Systems — STATE OF CALIFORNIA

REV	DATE	BY	DESCRIPTION

SCALE: NONE

DESIGNED C. Day
DRAWN N. Nappier
CHECKED

SUBMITTED _____ PROJECT ENGINEER — C24015 R.C.E. NO. — 4/27/88 DATE
RECOMMENDED _____ JAMES M. MONTGOMERY CONSULTING ENGINEERS, INC. — 24656 R.C.E. NO. — 4/27/88 DATE

JAMES M. MONTGOMERY CONSULTING ENGINEERS, INC.
250 North Madison Avenue, Post Office Box 7009, Pasadena, California 91109-7009

APPROVED _____ City Engineer, RCE 18642 — 5/18/88 DATE
APPROVED _____ DATE

CITY OF SAN FERNANDO
WATER FACILITIES FOR ASSESSMENT DISTRICT NO. D-272
PANEL MODIFICATIONS AND DETAILS

SHEET I-3 OF 52 SHEETS

FILE
JOB NO. 12.0769

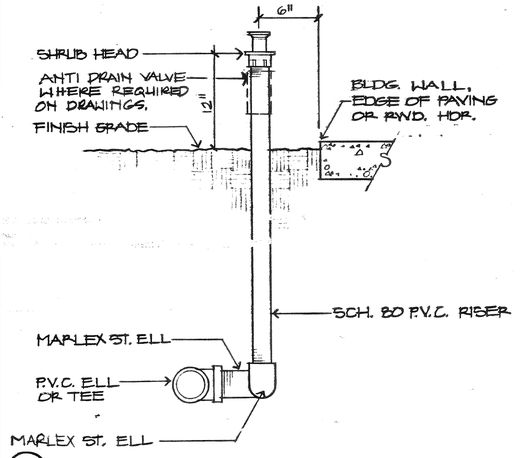

(A) SHRUB HEAD ON RISER DETAIL — NO SCALE

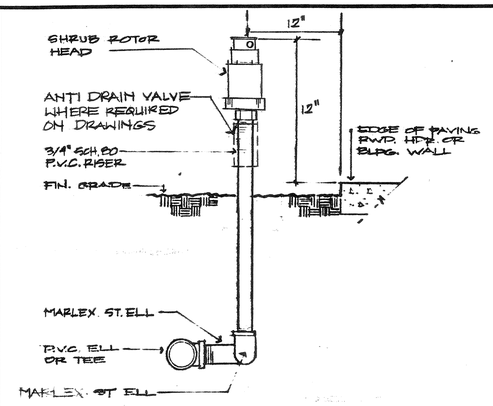

(B) SHRUB ROTOR HEAD — NO SCALE

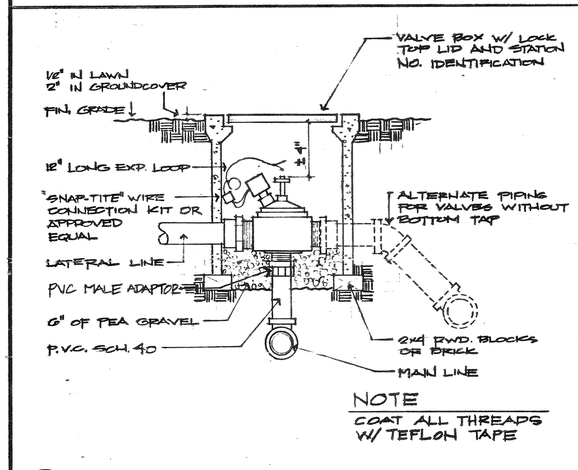

NOTE
COAT ALL THREADS W/ TEFLON TAPE

(C) REMOTE CONTROL VALVE — NO SCALE

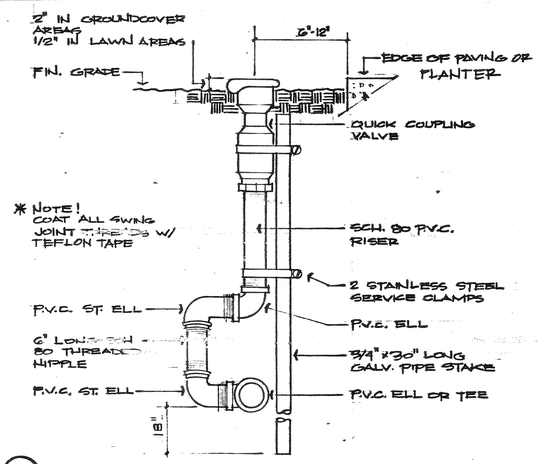

(D) QUICK COUPLING VALVE — NO SCALE

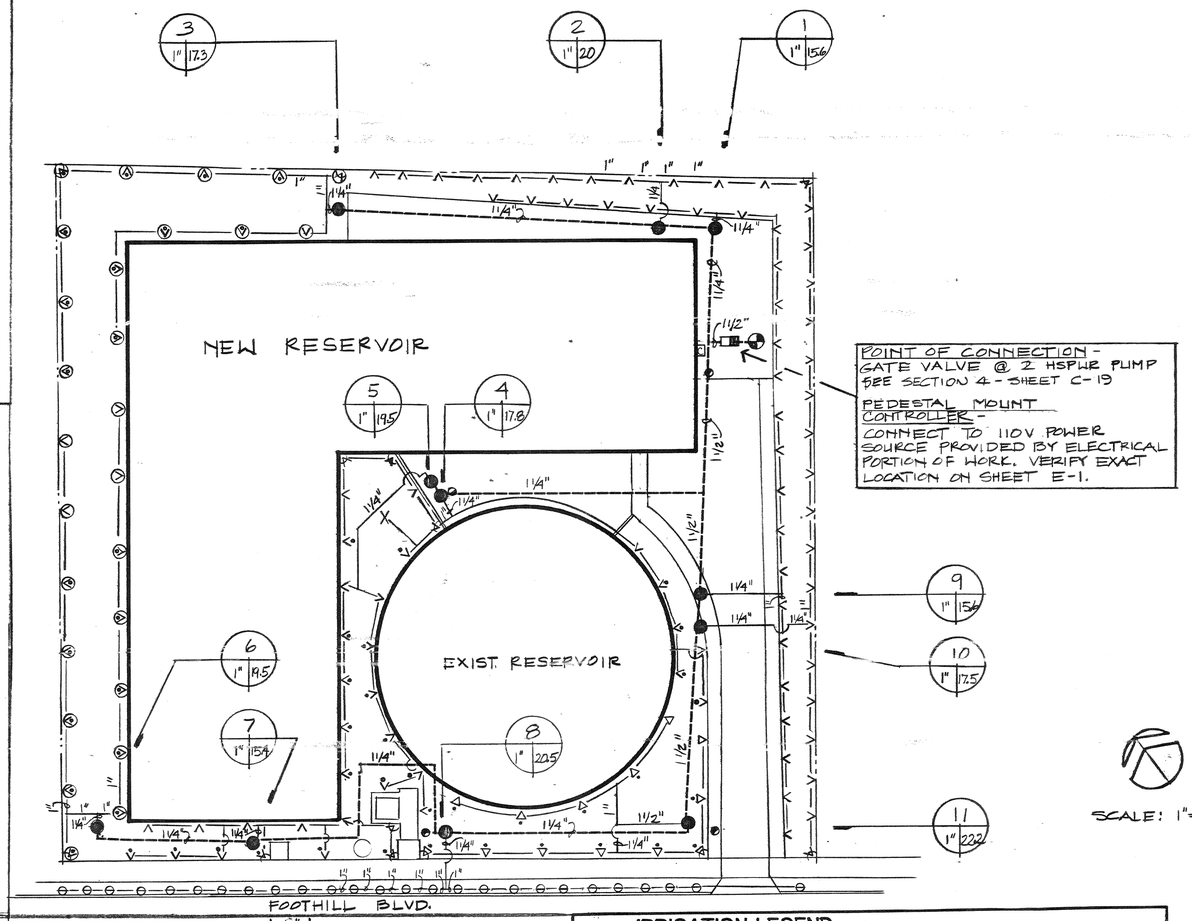

SCALE: 1" = 20'

ALL PIPE AND FITTINGS REQUIRED FOR BACKFLOW ASSEMBLY TO BE BRASS.

NOTE: COAT ALL THREADS W/ TEFLON TAPE

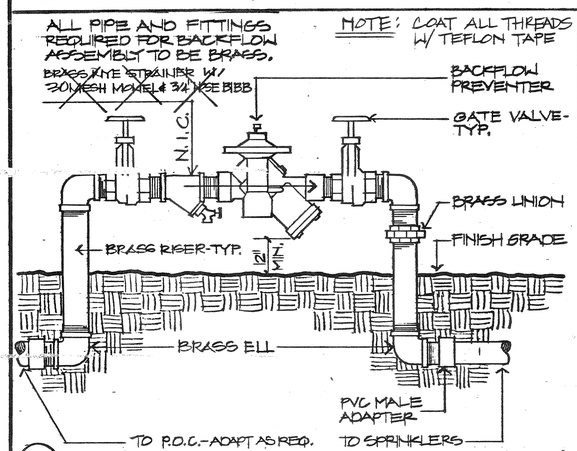

(E) REDUCED PRESSURE BACKFLOW PREVENTER

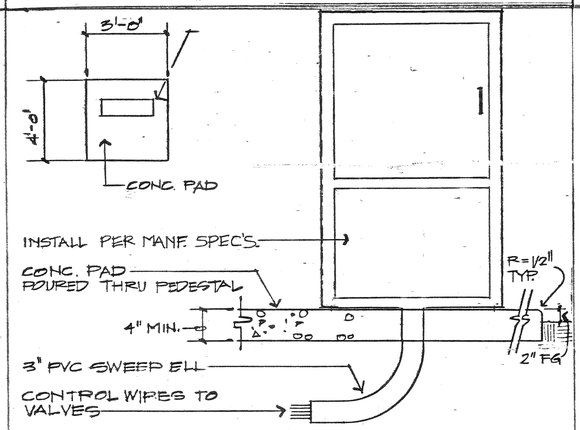

(F) CONTROLLER INSTALLATION — NO SCALE

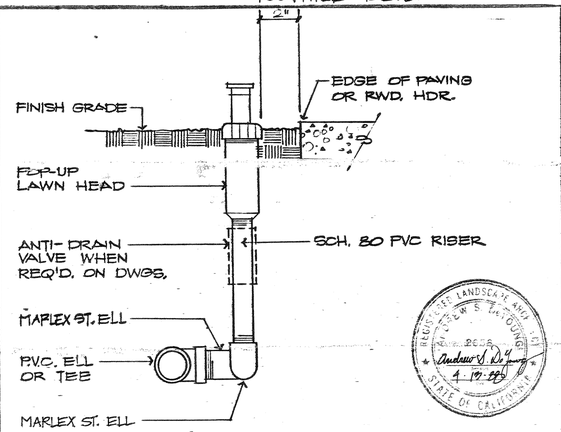

(G) LAWN POP-UP HEAD — NO SCALE

IRRIGATION LEGEND

SYMBOL	MANUFACTURER	CAT. NO. & DESCRIPTION	PSI	GPM	RAD.	REF.
M	RAINBIRD	1800-12-R SHRUB SPRAY ON 12" RISER	30	.45	12	A/L-1
M	"	1800-12T "	"	.87	"	"
V	"	1800-12H "	"	1.3	"	"
V	"	1800-12TQ "	"	1.74	"	"
X	"	1800-12F "	"	2.60	"	"
R	RAINBIRD	1600-15Q "	"	.93	15	"
▽	"	1800-15H "	"	1.65	"	"
▽	"	1800-15F "	"	3.70	"	"
⊖	RAINBIRD	1804-SH LAWN POP-UP SPRAY				G/L-1
(W)	TORO	304-10-02 STREAM ROTOR ON RISER	35	.72	21	B/L-1
(V)	"	308-10-02 " "	"	1.44	"	"
•	VALCON	ADV 5000 ANTI DRAIN VALVE				A & B/L-1
●	RAINBIRD	EFAOP SERIES REMOTE CONTROL VALVE				C/L-1
◐	RAINBIRD	44 RC QUICK COUPLING VALVE				D/L-1
▭	RAINBIRD	RPA 125 REDUCED PRESSURE TYPE				E/L-1
		BACK FLOW PREVENTER				
		POINT OF CONNECTION				
▣	RAINBIRD	RC-12B ADMIT AUTO CONTROLLER PEDESTAL MOUNT				F/L-1
		SCH. 40 PVC LATERAL LINE				
		SCH 40 PVC MAINLINE				

ERIKSSON · PETERS · THOMS
LANDSCAPE ARCHITECTURE
1214 EAST GREEN STREET PASADENA, CALIFORNIA 91106
(818) 795-2006 (213) 681-3600

REV	DATE	BY	DESCRIPTION

SCALE: 1" = 20'

DESIGNED SBB
DRAWN SBB
CHECKED DCT

SUBMITTED — PROJECT ENGINEER — C24015 R.C.E. NO. — 4/27/88 DATE
RECOMMENDED — JAMES M. MONTGOMERY CONSULTING ENGINEERS, INC. — 24656 R.C.E. NO. — 4/27/88 DATE

TO: JAMES M. MONTGOMERY CONSULTING ENGINEERS, INC.
P.O. BOX 7009, 250 N. MADISON AVE., PASADENA, CA 91109-7009

APPROVED — Joseph R. Lopez RCE 18642 — City Engineer — 5/18/88 DATE
APPROVED _____ DATE

CITY OF SAN FERNANDO
WATER FACILITIES FOR ASSESSMENT DISTRICT NO 272
IRRIGATION PLAN

SHEET L-1 OF 52 SHEETS

JOB NO. FILE CC

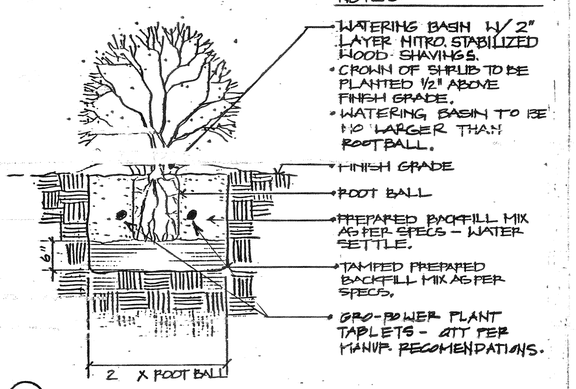

A SHRUB PLANTING NO SCALE

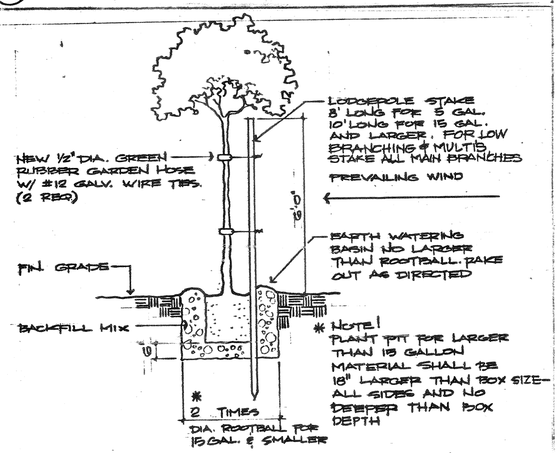

B SINGLE STAKE TREE DETAIL NO SCALE

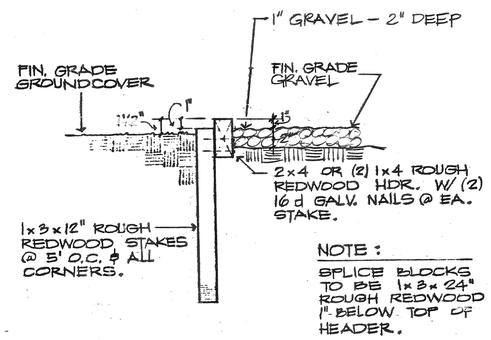

NOTE:
SPLICE BLOCKS TO BE 1x3x24" ROUGH REDWOOD 1" BELOW TOP OF HEADER.

C REDWOOD HEADER DETAIL NO SCALE

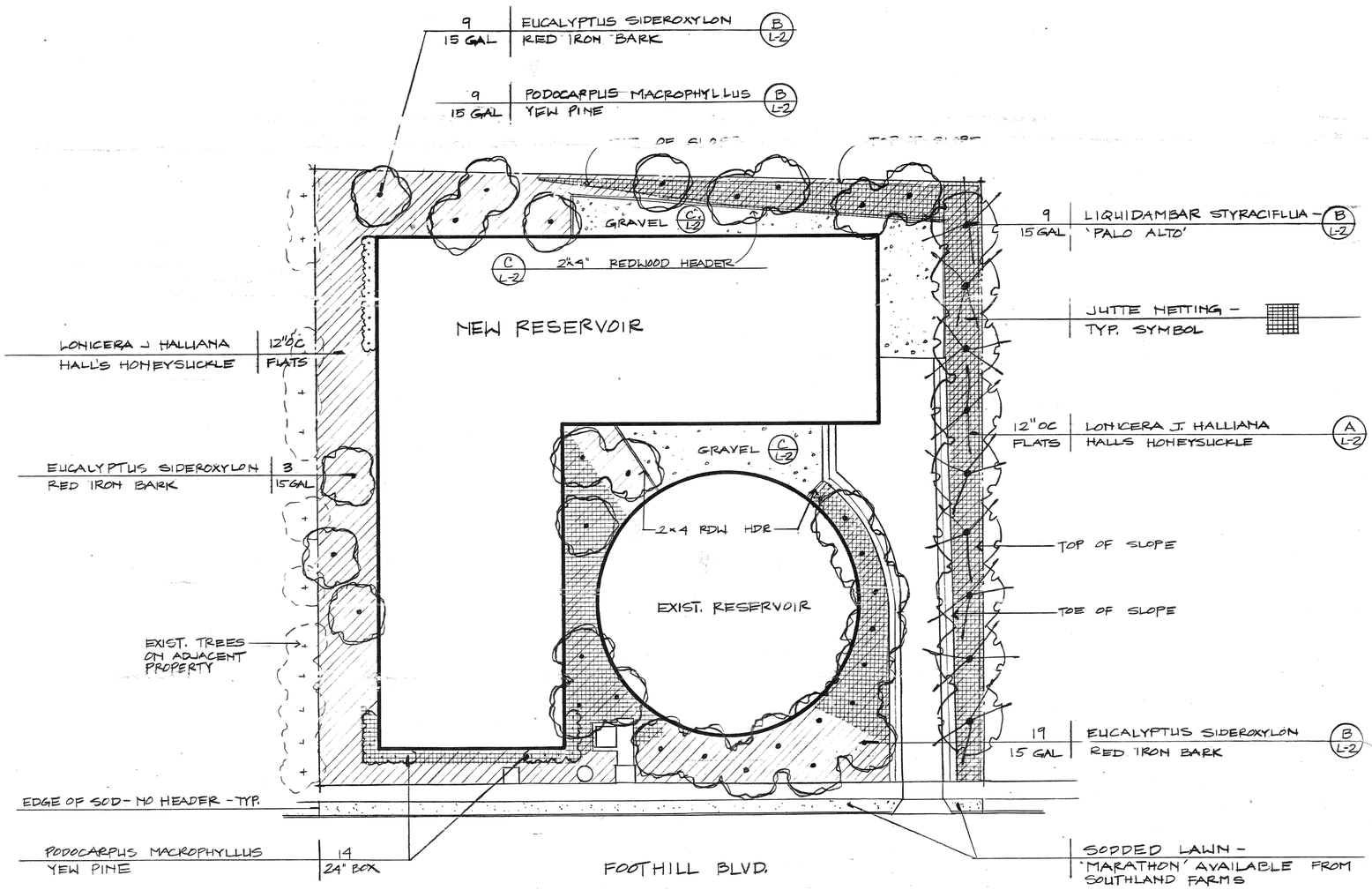

REGISTERED LANDSCAPE ARCHITECT ANDREW S. LAYTON 2656 4-18-88 STATE OF CALIFORNIA

SCALE: 1" = 20'

ERIKSSON • PETERS • THOMS
LANDSCAPE ARCHITECTURE
1214 EAST GREEN STREET PASADENA, CALIFORNIA 91106
(818) 795-2006 (213) 681-3606

REV	DATE	BY	DESCRIPTION

SCALE: 1" = 20'

DESIGNED SBB
DRAWN SBB
CHECKED D.C.T.

SUBMITTED — PROJECT ENGINEER — C26015 R.C.E. NO. — 4/27/88 DATE
RECOMMENDED — JAMES M. MONTGOMERY CONSULTING ENGINEERS, INC. — 24656 R.C.E. NO. — 4/27/88 DATE

JAMES M. MONTGOMERY CONSULTING ENGINEERS, INC.
P.O. BOX 7009, 250 N. MADISON AVE., PASADENA, CA 91109-7009

APPROVED Joseph R. Lopez, RCE 18642, City Engineer — 5/18/88 DATE
APPROVED — DATE

CITY OF SAN FERNANDO
WATER FACILITIES FOR ASSESSMENT DISTRICT NO-272
PLANTING PLAN

SHEET L-2 OF 52 SHEETS

JOB NO.
FILE